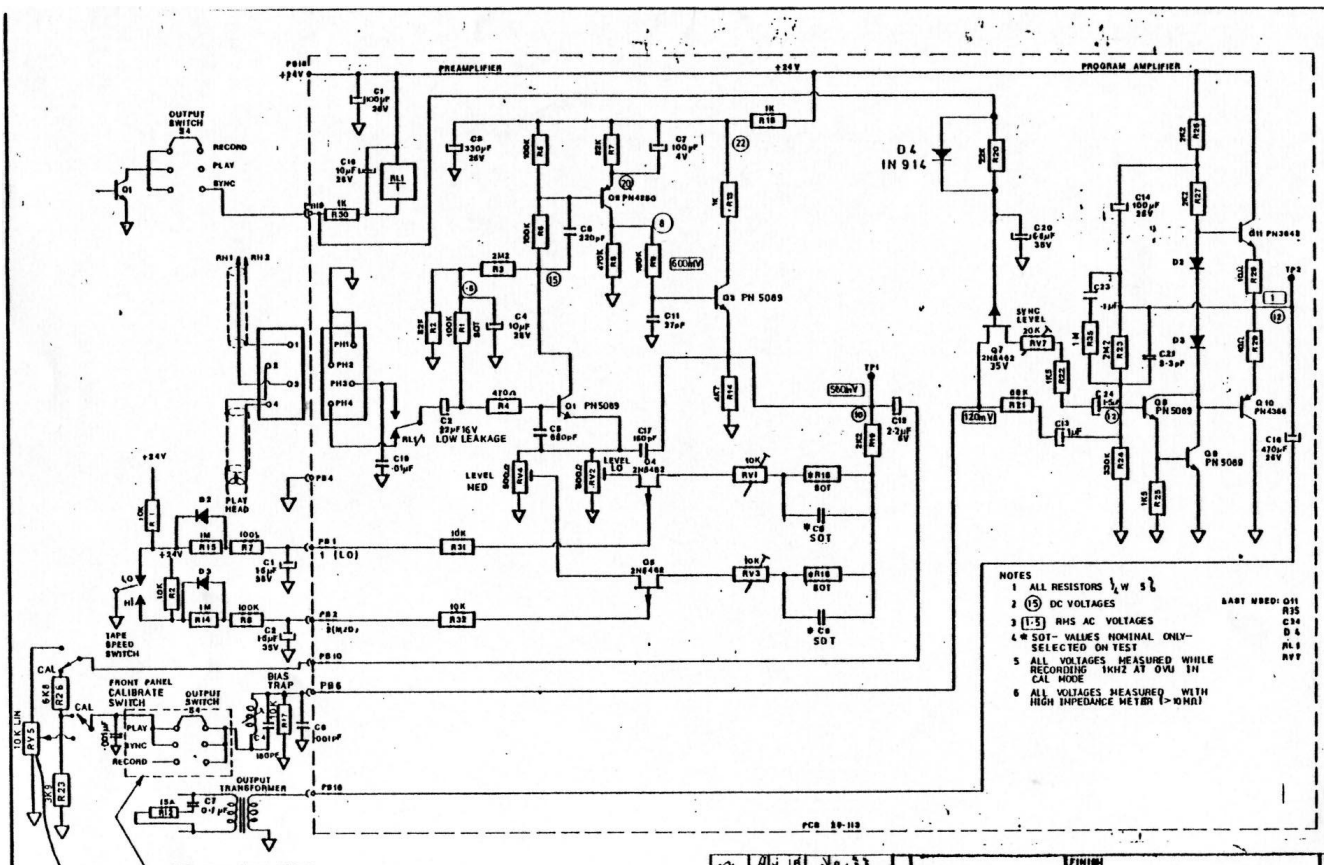

* COMP	3·75/7·5 I.P.S. DECK IEC	3·75/7·5 I.P.S. DECK NAB	7·5/15 I.P.S. DECK IEC	7·5/15 I.P.S. DECK NAB
C8	·022 µF	·022 µF	·015 µF	·012 µF
C9	·015 µF	·012 µF	·01 µF	·012 µF
R15	150 K	150 K	3 M 3	270 K
R16	3 M 3	270 K	1 M	270 K

REVISIONS	
F	D4 ADDED C29 WAS 1·5 µF C/A 0669 W.L. 5-3-82
E	SYNC LOGIC OPTION ADDED C/A 0895 W.L. 7-10-80
D	C/A 0895 W.L. 7-10-80 T.L. RV5 & R23 ADDED FRONT PANEL CALIBRATION FEBS.
C	C23 WAS 1·05 µF C/A 0669 W.L. 5-3-82
B	CHANGE TO PCB 20-113 R18 WAS 1M R23 WAS 470Ω R35 WAS SYNC C19 WAS 1·5µF C19 WAS 1·5µF C23 WAS 1·5µF C/A 0895 W.L. 7-10-80 C/A 0895 22-11-77

TOLERANCES
LINEAR 0. ± 0.5
0.0 ± 0.1
HOLE DIA. + 0.25 −0
ANGULAR ± 0.5°

SCALE
DRAWN J. Davis 21-11-77
CHECKED 8-7-78

FINISH
MAT'L:
USED ON
MAT'L No.

REELAY AMP
PCB CIRCUIT
77MA7 G

R. MEDDING & ASSOCIATES PTY. LTD.
MELBOURNE AUSTRALIA

3rd ANGLE PROJ.
DRAWING No.
23-2090
A1 F

02300884

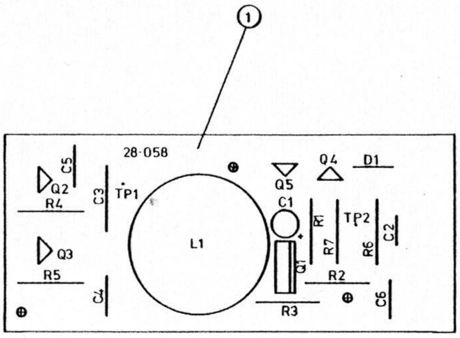

COM Nº	PART Nº	DESCRIPTION
(1)	28-058	BLANK P. C. B.
TP1	08-2430	CN PIN
TP2	08-2430	" "

COM Nº	PART Nº	DESCRIPTION
D1	10-037	DIODE 1N914
Q1	10-146	TRANSISTOR 2N6125
Q2	10-127	" PN3643
Q3	10-127	" PN3643
Q4	10-127	" PN3643
Q5	10-127	" PN3643
L1	22 041	POTCORE ASS'Y
R1	02-131	RESISTOR ¼W 5% 4K7
R2	02-118	" " " 470Ω
R3	02-135	" " " 10K
R4	02-101	" " " 10Ω
R5	02-101	" " " 10Ω
R6	02-135	" " " 10K
R7	02-143	" " " 47K
C1	03-170	CAPACITOR 4·7μF 25V TAG TANTALUM
C2	03-153	" 10μF " " "
C3	03-035	" ·018μF 100V POLY. FILM.
C4	03-006	" ·1μF " " "
C5	03-006	" ·1μF " " "
C6	03-176	" ·33μF 35V TAG TANTALUM

REVISIONS: B — R2 WAS 270Ω C/N D094. 22-11-79. Pky

UNLESS OTHERWISE STATED DIMENSIONS IN MILLIMETERS

TOLERANCES
LINEAR 0. ± 0.5
0.0 ± 0.1
HOLE DIA'S. + 0.25 − 0
ANGULAR ± 0.5°

SCALE 1 : 1
DRAWN S.D. 13·6·79
CHECKED Pky

FINISH
MAT'L.

BIAS OSCILLATOR ASS'Y 77 MK V G.

R. MEDDING & ASSOCIATES PTY. LTD.
MELBOURNE AUSTRALIA

USED ON
MAT'L. Nº.
3rd ANGLE PROJ.
DRAWING Nº. 23-884
A 4 ISSUE B

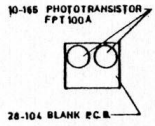

DETAIL 'A' 23-924

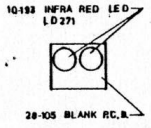

DETAIL 'B' 23-925

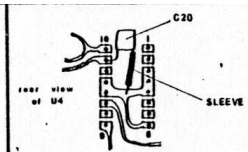

DETAIL 'C'

1	08-2216	IC SOCKET 40 PIN
2	08-2180	IC SOCKET 14 PIN (5 OFF)
3	08-2181	IC SOCKET 16 PIN
4	08-3168	C&K PUSH BUTTON 8125 V3
5	08-3169	PUSH BUTTON CAP BLACK 7089
6	23-924	LIGHT DETECTOR ASSY.
7	23-925	LIGHT SOURCE ASSY.
8	08-2430	CH PIN (9 OFF)
9	28-094	77 MKV TAPE TIMER P.C.B.

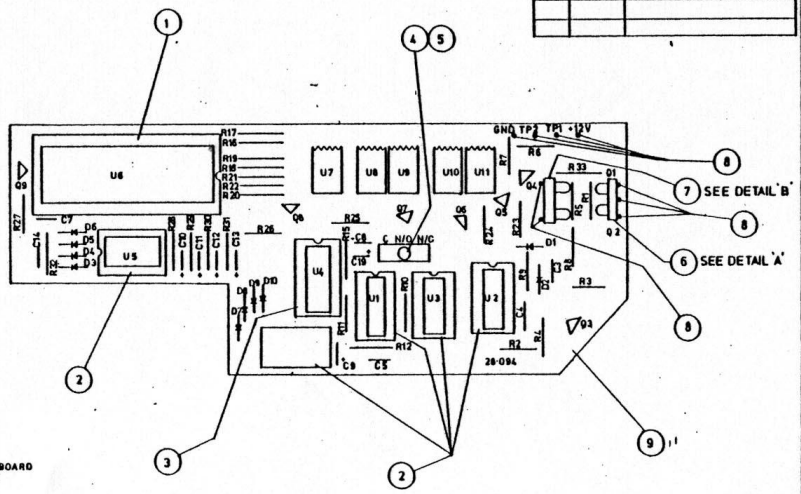

NOTES

1. C20 ON BACK OF BOARD OPPOSITE U4 SEE DETAIL 'C'
2. FND 367 7 Segment Displays must be from common batch.

COM N°	PART N°	DESCRIPTION.
U11	10-197	FND 367 7 SEGMENT DISPLAYS
U10	10-197	FND 367 " "
U9	10-197	FND 367 " "
U8	10-197	FND 367 " "
U7	10-197	FND 367 " "
U6	10-190	MOSTEK MK50396N 6 DEC. TIMER
U5	10-171	IC CD 4001 CN
U4	10-166	" CD 4029 CN
U3	10-151	" MM 74C107N
U2	10-171	" CD 4001 CN
U1	10-167	" CD 4069 CN
	28-094	TAPE TIMER P.C.B.
Q9	10-127	TRANSISTOR PN3643
Q8	10-127	" PN3643
Q7	10-127	" PN 3643
Q6	10-127	" PN 3643
Q5	10-127	" PN 3643
Q4	10-127	" PN 3643
Q3	10-127	" PN 3643
C20	03 205	CAPACITOR 220pF CERAMIC
C19	03-172	CAPACITOR 22uF 35V TAG TANTALUM
C14	03-012	" ·047uF 100V GREEN CAP
C13	03-156	" 22uF 16V TAG TANTALUM
C12	03 156	" 22uF 16V " "
C11	03 156	" 22uF 16V " "
C10	03-156	" 22uF 16V " "
C9	03-153	" 10uF 25V " "
C8	03-153	" 10uF 25V " "
C7	03-007	" ·01uF 100V GREEN CAP
C5	03-207	" 150pF CERAMIC
C4	03-012	" ·047uF 100V GREEN CAP
C3	03-012	" ·047uF " "

COM N°	PART N°	DESCRIPTION
D10	10-037	DIODE 1N914
D9	10-037	" 1N914
D8	10-037	" 1N914
D7	10-037	" 1N914
D6	10-037	" 1N914
D5	10-037	" 1N914
D4	10-037	" 1N914
D3	10-037	" 1N914
D2	10-037	" 1N914
D1	10-037	" 1N914
R33	02-118	RESISTOR 470 Ω ¼W 5%
R32	02-135	RESISTOR 10K ¼W 5%
R31	02-135	" 10K " "
R30	02-135	" 10K " "
R29	02-135	" 10K " "
R28	02-135	" 10K " "
R27	02-131	" 4K7 " "
R26	02-131	" 4K7 " "
R25	02-131	" 4K7 " "
R24	02-131	" 4K7 " "
R23	02-131	" 4K7 " "
R22	02-123	" 1K " "
R21	02-123	" 1K " "
R20	02-123	" 1K " "
R19	02-123	" 1K " "
R18	02-123	" 1K " "
R17	02-123	" 1K " "
R16	02-123	" 1K " "
R15	02-147	" 100K " "
R12	02-135	" 10K " "
R11	02-135	" 10K " "
R10	02-147	" 100K " "
R9	02-165	" 4M7 " "
R8	02-149	" 150K " "
R7	02-129	" 3K3 " "
R6	02-139	" 22K " "
R5	02-129	" 3K3 " "
R4	02-149	" 150K " "
R3	02-129	" 3K3 " "
R2	02-139	" 22K " "
R1	02-129	" 3K3 " "

REVISIONS
D — DETAIL 'C' ADDED C/N 0773
C — C20 ADDED C/N 0773 3-9-80
B — ITEMS 1)-6) INCL. ADDED DETAILS A, B ADDED C/N 0719 A.K.P. 11-2-80 C19 & C18 DELETED

UNLESS OTHERWISE STATED DIMENSIONS IN MILLIMETERS
TOLERANCES
LINEAR 0.0 ± 0.5, 0.0 ± 0.1
HOLE DIA. + 0.25 −0
ANGULAR ± 0.5°

SCALE 1 : 1
DRAWN SD 20-6-79
CHECKED

FINISH
MAT'L.
USED ON
MAT'L. No.

TAPE TIMER
P.C.B. ASS'Y
77 MK V G

R. MEDDING & ASSOCIATES PTY. LTD.
MELBOURNE AUSTRALIA

3rd ANGLE PROJ.
DRAWING No.
23-899
A3 ISSUE D

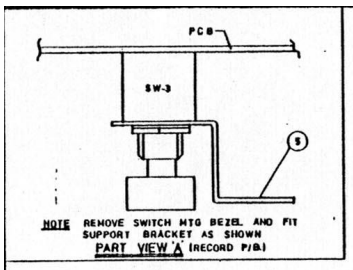

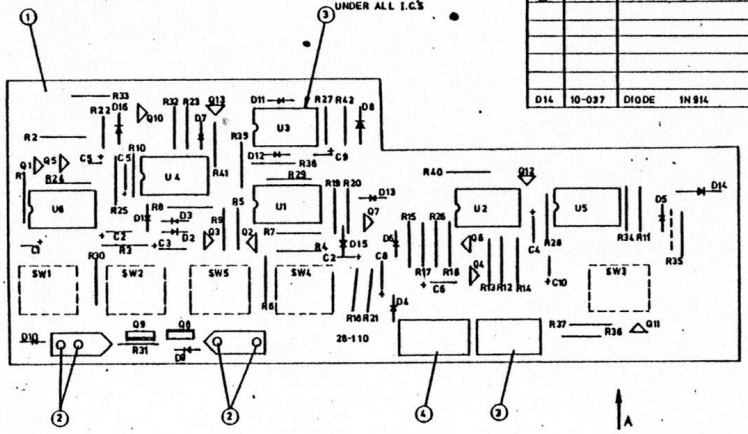

COM N°	PART N°	DESCRIPTION
SW1	08-3185	SWITCH MUH 153W WHITE.
SW2	08-3186	" " 153Y YELLOW.
SW3	08-3184	" " 153R RED.
SW4	08-3188	" " 153B BLUE.
SW5	08-3187	" " 153G GREEN.
1	28-110	BLANK P.C.B.
2	08-2434	MOLEX PIN (4 OFF)
3	08-2180	14 PIN I.C. SOCKET (7 OFF)
4	08-2181	16 PIN I.C. SOCKET
5	11-980	RECORD P/B SUPPORT
D14	10-037	DIODE 1N914

COM N°	PART N°	DESRIPTION
D13	10-037	DIODE 1N914
D12	10-037	" 1N914
D11	10-037	" 1N914
D10	10-037	" 1N914
D9	10-037	" 1N914
D7	10-037	" 1N914
D6	10-037	" 1N914
D5	10-037	" 1N914
D4	10-037	" 1N914
D3	10-037	" 1N914
D2	10-037	" 1N914
D1	10-037	" 1N914
Q13	10-127	TRANSISTOR PN3643
Q12	10-127	" PN3643
Q11	10-127	" PN3643
Q10	10-127	" PN3643
Q9	10-146	" 2N6125
Q8	10-146	" 2N6125
Q7	10-127	" PN3643
Q6	10-127	" PN3643
Q5	10-127	" PN3643
Q4	10-127	" PN3643
Q3	10-127	" PN3643
Q2	10-127	" PN3643
Q1	10-127	" PN3643
U6	10-192	INTEGRATED CIRCUIT CD4012CN
U5	10-192	" " CD4012CN
U4	10-191	" " CD4023CN
U3	10-175	" " CD4011CN
U2	10-171	" " CD4001CN
U1	10-171	" " CD4001CN
C10	03-152	CAPACITOR 1·5uF 35V TAG TANTALUM
C9	03-157	" 47uF 16V " "
C8	03-176	" ·33uF 35V " "
C7	03-172	" 2·2uF 35V " "
C6	03-176	" ·33uF 35V " "
C5	03-170	" 4·7uF 25V " "
C4	03-176	" ·33uF 35V " "
C3	03-176	" ·33uF 35V " "
C2	03-176	" ·33uF 35V " "
C1	03-172	" 2·2uF 35V " "

COM N°	PART N°	DESCRIPTION
R42	02-135	RESISTOR 10K 1/4W 5%
R41	02-129	RESISTOR 3K3 1/4W 5%
R40	02-129	" 3K3 " "
R39	02-129	" 3K3 " "
R38	02-165	" 4M7 " "
R37	02-143	" 47K " "
R36	02-147	" 100K " "
R35	02-155	" 470K " "
R34	02-147	" 100K " "
R33	02-129	" 3K3 " "
R32	02-129	" 3K3 " "
R31	02-123	" 1KΩ " "
R30	02-123	" 1KΩ " "
R29	02-147	" 100K " "
R28	02-143	" 47K " "
R27	02-147	" 100K " "
R26	02-147	" 100K " "
R25	02-131	" 4K7 " "
R24	02-127	" 2K2 " "
R23	02-139	" 22K " "
R22	02-131	" 4K7 " "
R21	02-132	" 5K6 " "
R20	02-129	" 3K3 " "
R19	02-147	" 100K " "
R18	02-132	" 5K6 " "
R17	02-129	" 3K3 " "
R16	02-147	" 100K " "
R15	02-131	" 4K7 " "
R14	02-132	" 5K6 " "
R13	02-129	" 3K3 " "
R12	02-147	" 100K " "
R11	02-131	" 4K7 " "
R10	02-127	" 2K2 " "
R9	02-129	" 3K3 " "
R8	02-147	" 100K " "
R7	02-147	" 100K " "
R6	02-132	" 5K6 " "
R5	02-129	" 3K3 " "
R4	02-147	" 100K " "
R3	02-131	" 4K7 " "
R2	02-129	" 3K3 " "
R1	02-143	" 47K " "

COM N°	PART N°	DESCRIPTION

REV	REVISION
E	DIS.D14 ADDED R27,42. REVERSED D13,14.
D	C1 VAL'S CHANGED. D.H. C4 CHANGED BY D.H.
C	ADDED D14 ON PCB. D.H.
B	ITEMS 1 TO 5 INCL. ADDED VIEW-A ADDED D.H. DELETED
A	22-11-79.

UNLESS OTHERWISE STATED DIMENSIONS IN MILLIMETERS

TOLERANCES
LINEAR 0. ± 0.8
0.0 ± 0.1
HOLE DIA'S. + 0.25 − 0
ANGULAR ± 0.5°

SCALE 1 : 1
DRAWN S.D. 21·6·79
CHECKED

FINISH
MAT'L.

LOGIC P.C.B. ASS'Y.
77 MK V C.

R. MEDDING & ASSOCIATES PTY. LTD.
MELBOURNE AUSTRALIA

USED ON
MAT'L. No.
THIRD ANGLE PROJ.
DRAWING No.
23-908.
A 3 ISSUE E

0230 0909

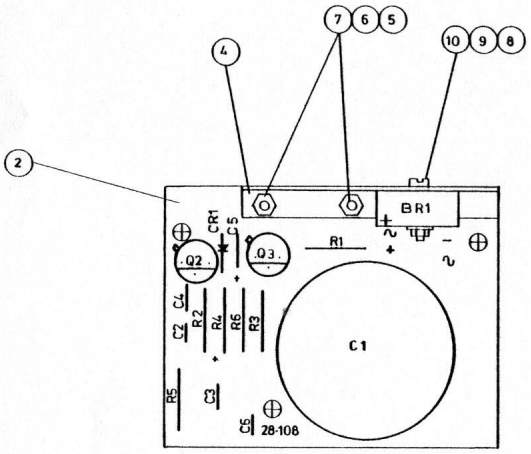

COM Nº	PART Nº	DESCRIPTION
10	32-903	M3×12 CH. HD. SCREW
9	32-017	M3 SHK. PRF. WASHER
8	32-104	M3 NUT
2 OFF 7	32-250	M 2,5×6 CH HD SCREW
2 OFF 6	32-005	M 2,5 SHK. PRF WASHER
2 OFF 5	32-101	M 2,5 NUT
4	11-957	RECTIFIER HEAT SINK
3		
2	28-108	POWER SUPPLY P.C.B.
1		

COM Nº	PART Nº	DESCRIPTION
BR1	10-204	BRIDGE RECTIFIER VJ148
Q3	10-127	TRANSISTOR PN3643
Q2	10-127	" PN3643
CR1	10-082	DIODE ZENER BZX79 C12
C6	03-153	CAPACITOR 10µF 25V 20% TAG TANTLM
C5	03-153	" 10µF 25V " " "
C4	03-013	" ·056µF 100V 10% POLY. FLM.
C3	03-057	" 220µF 35VRB ELECTRO.
C2	03-007	" ·01 µF 100V 10% POLY. FLM.
C1	03-110	" 2500µF 63VRG ELECTRO.
R6	02-128	RESISTOR 2·7KΩ ¼W 5% CARB.N.FLM.
R5	02-127	" 2·2 KΩ " " " "
R4	02-123	" 1KΩ " " " "
R3	02-123	" 1KΩ " " " "
R2	02-110	" 100Ω " " " "
R1	02-123	" 1KΩ " " " "

ITEMS 5 TO 10 (INCL. ABOVE) C/W DIA 6·5·80

REVISIONS

ISS B

UNLESS OTHERWISE STATED DIMENSIONS IN MILLIMETERS

TOLERANCES
LINEAR 0. ± 0.5
0.0 ± 0.1
HOLE DIA'S. + 0.25
− 0
ANGULAR ± 0.5°

SCALE 1 : 1

DRAWN S.D. 19·6·79

CHECKED

FINISH

MAT'L.

POWER SUPPLY ASS'Y. 77 MK V G

R. MEDDING & ASSOCIATES PTY. LTD.
MELBOURNE AUSTRALIA ©

USED ON

MAT'L. Nº.

3rd ANGLE PROJ.

DRAWING Nº.

23-909

A 4 ISSUE B

COM. NO.	PART NO.	SPEED IPS	DESCRIPTION
C3	02300921	7 1/2 – 15	03-078 1000µF 16V RB ELECTROLYTIC
C2	02302364	3 3/4 – 7 1/2	03-077 2500µF 16V RB ELECTROLYTIC

COMPONENT LIST.

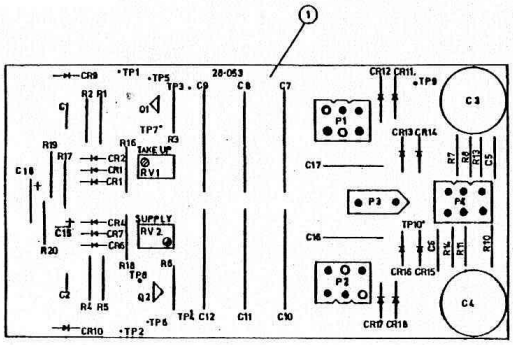

FOR CIRCUIT, SEE 02302094 (A3)

	COM N°	PART N°	DESCRIPTION
	P4	08-2014	MOLEX 6WAY PLUG H9326
	P3	08-2006	" 3WAY " H9323
	P2	08-2014	" 6WAY " H9326
	P1	08-2014	" 6WAY " H9326
	TP10	08-2430	CN PIN
	TP9	08-2430	" "
	TP8	08-2430	" "
	TP7	08-2430	" "
	TP6	08-2430	" "
	TP5	08-2430	" "
	TP4	08-2430	" "
	TP3	08-2430	" "
	TP2	08-2430	" "
	TP1	08-2430	" "
16 OFF	●	08-2445	MOLEX PIN MALE M1376
4 OFF	O	08-2444	" " FEMALE M1377
	RV2	02-677	POTENTIOMETER 3299W 100Ω
	RV1	02-677	" 3299W 100Ω
	Q2	10-127	TRANSISTOR PN3643
	Q1	10-127	" PN3643.
	CR18	10-042	DIODE EM408
	CR17	10-042	" EM408
	CR16	10-042	" EM408
	CR15	10-042	" EM408
	CR14	10-042	" EM408
	CR13	10-042	" EM408
	CR12	10-042	" EM408
	CR11	10-042	" EM408
	CR10	10-037	" 1N914
	CR9	10-037	" 1N914
	CR7	10-037	" 1N914
	CR6	10-037	" 1N914
	CR5	10-037	" 1N914
	CR4	10-037	" 1N914
	CR2	10-037	" 1N914
	CR1	10-037	" 1N914

COM N°	PART N°	DESCRIPTION
1	28-053	SPOOLING MOTOR CONTROL P.C.B
C18	03-170	CAPACITOR 4·7 uF 25 V
C17	03-360	CAPACITOR ·1uF 250VAC PME 271M
C16	03-360	" ·1uF " " "
C15	03-153	" 10uF 25V TAG TANTALUM
C12	03-028	" ·47uF 630V PHILLIPS
C11	03-028	" ·47uF " "
C10	03-028	" ·47uF " "
C9	03-028	" ·47uF " "
C8	03-028	" ·47uF " "
C7	03-028	" ·47uF " "
C6	03-029	" ·047uF 400V
C5	03-029	" ·047uF "
C3	——	" SEE COMPONENT LIST "
C4	03-077	" 1000uF " " "
C2	03-024	" ·0082uF 100V
C1	03-007	" ·01uF 100V
R20	02-139	RESISTOR 22KΩ ¼W
R19	02-139	" 22KΩ "
R18	02-109	" 82Ω "
R17	02-110	" 100Ω "
R16	02-108	" 68Ω "
R14	02-158	" 820K "
R13	02-158	" 820K "
R11	02-146	" 82KΩ "
R10	02-111	" 120Ω "
R8	02-146	" 82KΩ "
R7	02-111	" 120Ω "
R6	02-110	" 100Ω "
R5	02-135	" 10KΩ "
R4	02-127	" 2K2Ω "
R3	02-110	" 100Ω "
R2	02-135	" 10KΩ "
R1	02-127	" 2K2Ω "

H	6	C3 WAS 1000µF 2500 C/N 0025 CHANGED TO 2500	
G		DESC 2344 - LOW SPEED PART WAS 8-2 C/N 0156 PART 8-2B	
F		C18 ADDED. TC. 21-8-80	
E		RV1 & RV2 WERE 3299-P10 P18 WAS 02-111, R16 WAS 02-108 C/N 0141 17-4-80 PART 8-2	
D		R7 WERE R15 WAS 120Ω WERE 820K C/N 0156 12-2-80	
C		R17 WAS 22Ω - 08-2444 ADDED C/N 0135 0458 12-2-80	
B		C15 WAS 1000µF WERE 10µF R19,R20 WERE 56K C/N 0094 22-11-79	

REVISIONS

UNLESS OTHERWISE STATED DIMENSIONS IN MILLIMETERS
TOLERANCES
LINEAR 0. ± 0.5
0.0 ± 0.1
HOLE DIA'S. + 0.25 − 0
ANGULAR ± 0.5°

SCALE 1:1
DRAWN S.D. 21-6-79
CHECKED

FINISH
MAT'L.

USED ON
MAT'L. No.

SPOOLING MOTOR CONTROL P.C.B. ASS'Y.
77 MK V G.

R. MEDDING & ASSOCIATES PTY. LTD.
MELBOURNE AUSTRALIA

3rd ANGLE PROJ.

DRAWING No.
02300921
02302364

A3 ISSUE H

0230 0922

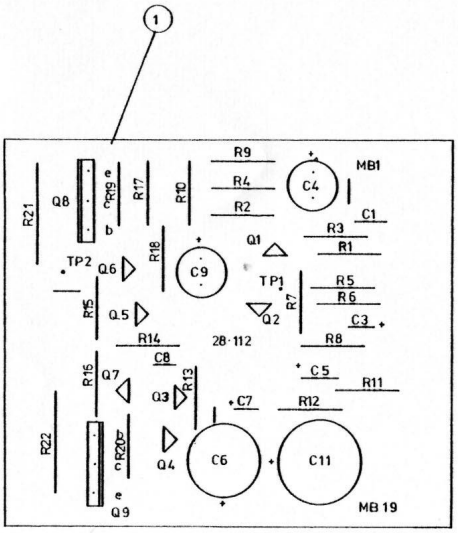

Nº	PART Nº	DESCRIPTION	Nº	PART Nº	DESCRIPTION
1	28-112	BLANK P.C.B.	TP2	08-2430	CN PIN.
			TP1	08-2430	" "
			Q9	10-163	TRANSISTOR TIP 2955
R22	02-075	RESISTOR 10HM ½W 5%	Q8	10-162	" TIP 3055
R21	02-075	" 1 0HM ½W 5%	Q7	10-128	" PN 4355
R20	02-102	" 22 OHM ¼W 5%	Q6	10-127	" PN 3643
R19	02-102	" 22 " " "	Q5	10-059	" BC 318B
R18	02-125	" 1K5 " "	Q4	10-059	" BC 318B
R17	02-125	" 1K5 " "	Q3	10-059	" BC 318B
R16	02-123	" 1K " "	Q2	10-134	" PN 4250
R15	02-127	" 2K2 " "	Q1	10-059	" BC 318 B
R14	02-149	" 150K " "			
R13	02-137	" 15K " "			
R12	02-139	" 22K " "			
R11	02-130	" 3K9 " "	C11	03-053	CAPACITOR 470uF 25VRBELECTRO
R10	02-110	" 100 OHM " "			
R9	02-110	" 100 OHM " "	C9	03-060	CAPACITOR 100uF 25V RB ELECTRO
R8	02-131	" 4K7 " "	C8	03-210	" 15pF CERAMIC
R7	02-135	" 10K " "	C7	03-152	" 1·5uF 35V TAG TANTALUM
R6	02-124	" 1K2 " "	C6	03-055	" 330uF 25VRB ELECTRO
R5	02-123	" 1K " "	C5	03-153	" 10uF 25V TAG TANTALUM
R4	02-141	" 33K " "	C4	03-060	" 100uF 25V RB ELECTRO
R3	02-155	" 470K " "	C3	03-154	100uF 4V TAG TANTALUM
R2	02-169	" 2M7 " "			
R1	02-155	" 470K " "	C1	03-006	" ·1uF 100V POLYESTER FILM

REVISIONS		
B	ITEM 1 ADDED C/N 01/8 6·3·80	PK

UNLESS OTHERWISE STATED DIMENSIONS IN MILLIMETERS

TOLERANCES:
LINEAR 0. ± 0.5
0.0 ± 0.1
HOLE DIA'S. + 0.25 − 0
ANGULAR ± 0.5°

SCALE 1 : 1

DRAWN S.D. 6·5·79

CHECKED PKay

FINISH

MAT'L.

USED ON

MAT'L. Nº.

MONITOR P.C.B. ASSY.

77 MK V G

3rd ANGLE PROJ.

DRAWING No. 23-922

R. FIELDING & ASSOCIATES PTY. LTD.
MELBOURNE AUSTRALIA

A 4 ISSUE B

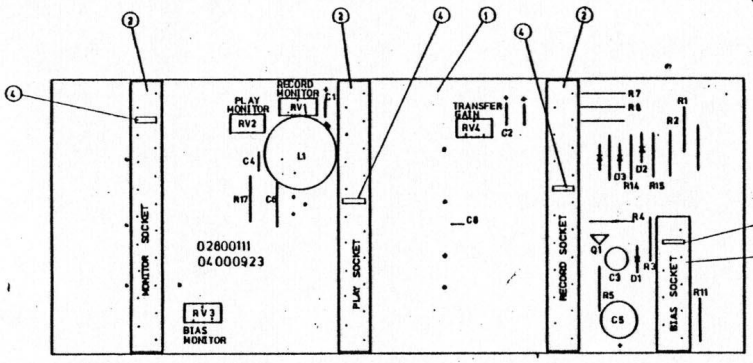

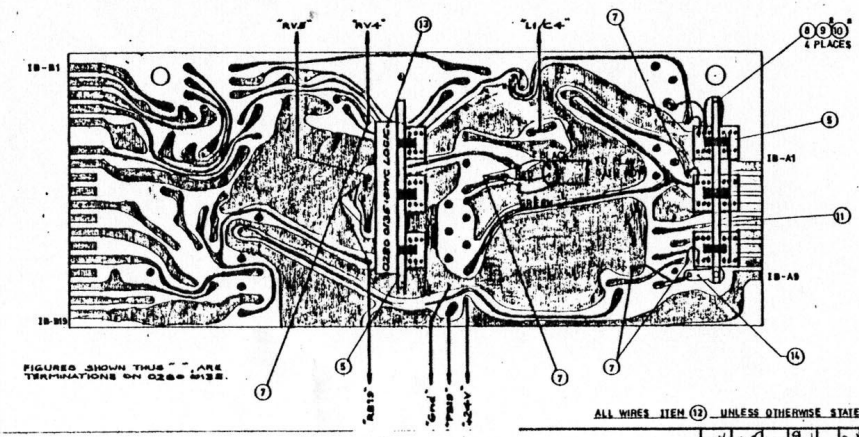

FIGURES SHOWN THUS " " ARE TERMINATIONS ON 02800111.

ALL WIRES ITEM (12) UNLESS OTHERWISE STATED

	COM N°	PART N°	DESCRIPTION
	1	28-111	P.C.B. BLANK
3 OFF	2	08-2084	19 PIN EDGE CONNECTOR
	3	08-2000	9 PIN EDGE CONNECTOR
4 OFF	4	08-2085	POLARISING KEY
2 OFF	5	08-3177	3 BANK SWITCH 'SCHADOW'
11 OFF	7	08-2430	C N PIN
4 OFF	8	16-837	SWITCH STAND-OFF
8 OFF	9	32-200	M2×6 CH. HD. SCREW
8 OFF	10	32-001	M2 SHK. PRF. WASHER
70 MM	11	08-0081	22 SWG. TINNED COPPER WIRE
400 MM	12	08-0005	7/·010" HOOK-UP WIRE -YELLOW-
	13	23-0942	SYNC LOGIC P.C.B. ASSY
	14	00802314	SOLDER LUG SINGLE SMALL
RV4	02-615	POTENTIOMETER 10K SOANAR H.I.R	
RV3	02-617	" 50K " "	
RV2	02-617	" 50K " "	
RV1	02-617	" 50K " "	

COM N°	PART N°	DESCRIPTION
L1	22-042	BIAS TRAP POTCORE
Q1	10-060	TRANSISTOR PN 3566
D3	10-037	DIODE 1N914
D2	10-037	" 1N914
D1	10-037	" 1N914
C8	03-016	CAPACITOR ·001uF 100V POLY. FILM
C6	03-016	" ·001uF " " "
C5	03-060	" 100uF 25V ELECTROLYTIC
C4	03-206	" 180pF CERAMIC
C3	00300083	" 2.2 uF 50V RBP
C2	03-152	" 1·5uF " " "
C1	03-152	" 1·5uF " " "
R17	02-135	RESISTOR 10K ½W 5%
R15	02-159	" 1M " "
R14	02-159	" 1M " "
R11	02-143	" 47K " "
R8	02-147	" 100K " "
R7	02-147	" 100K " "
R5	02-135	" 10K " "
R4	02-135	" 10K " "
R3	02-143	" 47K " "
R2	02-135	" 10K " "
R1	02-135	" 10K " "

REVISIONS	
H	ITEM 14: 00802314 ADDED.
G	CAN 00802 TO 28-A 1.3 C.B. WAS 00280 0802 NOW 00802 0083.
F	C8 PIN ADDED. PART NO. ADDED.
E	PART NO 08-2314 DELETED.
D	SYNC LOGIC ADDED.
C	ITEMS (8)-(10) INCL. ADDED C/N. DIE 19-8-80
B	PRINTED DIAGRAM FOR PCB ADDED.
A	

UNLESS OTHERWISE STATED DIMENSIONS IN MILLIMETERS

TOLERANCES
LINEAR 0. ± 0.5
0.0 ± 0.1
HOLE DIA'L. + 0.26 − 0
ANGULAR ± 0.5°

SCALE 1 : 1
DRAWN S.D. 14·6·79
CHECKED

FINISH
MAT'L.

USED ON
MAT'L. No.

MOTHER P.C.B. ASS'Y
77 MK V G

R. MEDDING & ASSOCIATES PTY. LTD.
MELBOURNE AUSTRALIA

DRAWING No.
23-923

A 3 ISSUE H

02300926

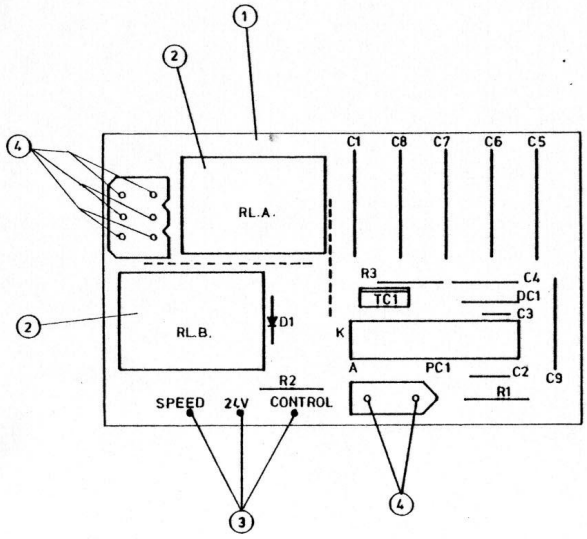

	COM N°	PART N°	DESCRIPTION
	1	28-065	CAPSTAN MOTOR CONTROL P.C.B.
2 OFF	2	20-046	RELAY SOCKET
3 OFF	3	08-2430	C N PIN
8 OFF	4	08-2434	H2774 PIN
	PC1	23-1040	LED-LDR PHOTO ISOLATOR ASSY.

COM N°	PART N°	DESCRIPTION
D1	10-037	DIODE
RLB	20-045	RELAY SRE-D24
RLA	20-045	RELAY SRE-D24
TC1	10-144	TRIAC T2800D
DC1	10-147	DIAC V413
C9	03-026	CAPACITOR ·22 uF 400V 10% POLY.FM
C8	03-027	" ·47uF 400V " " "
C7	03-027	" ·47uF 400V " " "
C6	03-027	" ·47uF 400V " " "
C5	03-027	" ·47uF 400V " " "
C4	03-029	" ·047uF 400V " " "
C3	03-008	" ·015uF 100V " " "
C2	03-006	" ·1uF 100V " " "
C1	03-027	" ·47uF 400V " " "
R3	02-110	RESISTOR 100Ω ¼W 5% CARBON FLM.
R2	02-123	" 1KΩ " " " "
R1	02-141	" 33KΩ " " " "

ITEMS ADDED (1) (2) (3) (4) 23-8-80

REVISIONS

B

UNLESS OTHERWISE STATED DIMENSIONS IN MILLIMETERS

TOLERANCES
LINEAR 0. ± 0.5
0.0 ± 0.1
HOLE DIA'S. + 0.25 − 0
ANGULAR ± 0.5°

SCALE 1 : 1

DRAWN S.D. 19·6·79

CHECKED

FINISH

MAT'L.

CAPSTAN MOTOR CONTROL P.C.B. ASSY 77 MK V. G.

R. MEDDING & ASSOCIATES PTY. LTD.
MELBOURNE AUSTRALIA ©

USED ON

MAT'L. No.

3rd ANGLE PROJ.

DRAWING No.
23-926

A4 ISSUE B

* COMPENSATION COMPONENTS			
TYPE	COMP N°	PART N°	VALUE
3.75 / 7.5 IEC 23-927	C8	03-009	0.022 µF 100V
	C9	03-008	0.015 µF 100V
	R15	02-149	150 K
	R16	02-164	3M3
2.5/15 IEC 23-933	C8	03-008	0.015 µF 100V
	C9	03-007	0.01 µF 100V
	R15	02-164	3M3
	R16	02-159	1 M

NOTE.

ALL COMPONENTS IN PARTS LISTS AT RIGHT MAKE UP BASIC P.C.B. 23-935.

FOR COMPLETED P.C.B'S COMPENSATION COMPONENTS FROM TABLE AT LEFT ARE ADDED.

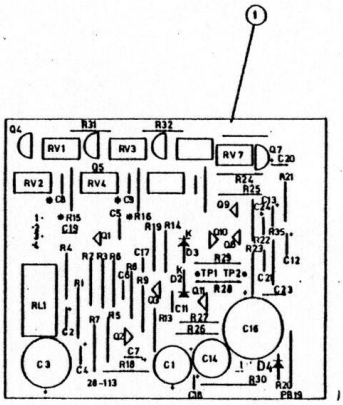

COM N°	PART N°	DESCRIPTION
RL1	20-034	NATIONAL RELAY RS-24V
D4	0100 0037	DIODE 1N914
D3	0100 0037	" 1N914
D2	0100 0037	" 1N914
Q11	10-127	TRANSISTOR PN3643
Q10	10-128	" PN4355
Q9	10-093	" PN5089
Q8	10-093	" PN5089
Q7	10-094	FET 2N5462
Q5	10-094	" 2N5462
Q4	10-094	" 2N5462
Q3	10-093	TRANSISTOR PN5089
Q2	10-134	" PN4250
Q1	10-093	" PN5089
1	28-113	P.C.B. BLANK
6 OFF 2	08-2430	CN PIN
C24	03-152	CAPACITOR 1·5µF 35V TAG TANTALUM
C23	03-006	" ·1µF 100V POLYESTER FLM
C21	03-234	" 3·3pF CERAMIC
C20	03-174	" 6·8µF 35V TAG TANTALUM
C19	03-007	" ·01µF 100V POLYESTER FLM
C18	03-153	" 10µF 25V TAG TANTALUM
C17	03-207	" 150pF CERAMIC
C16	03-053	" 470µF 25V RB ELECTRO
C14	03-060	" 100µF 25V "
C13	03-151	" 1µF 35V TAG TANTALUM
C12	03-172	" 2·2µF 35V "
C11	03-209	" 27pF CERAMIC
* C9	SEE TABLE	" SEE TABLE POLYESTER FLM
* C8	" "	" SEE TABLE "
C7	03-154	" 100µF 4V TAG TANTALUM
C6	03-205	" 220pF CERAMIC
C5	03-203	" 680pF "
C4	03-153	" 10µF 25V TAG TANTALUM
C3	03-055	" 330µF 25V RB ELECTRO
C2	03-158	" 22µF 16V SELECT. TANT
C1	03-060	" 100µF 25V RB ELECTRO

COM N°	PART N°	DESCRIPTION
RV7	02-616	POT 20K SOANAR HTP
RV4	02-614	POT 500Ω SOANAR HTP
RV3	02-615	" 10K " "
RV2	02-614	" 500Ω " "
RV1	02-615	" 10K " "
R35	02-159	RESISTOR 1M ½W 5%
R32	02-135	" 10K " "
R31	02-135	" 10K " "
R30	02-123	" 1K " "
R29	02-101	" 10Ω " "
R28	02-101	" 10Ω " "
R27	02-127	" 2K2 " "
R26	02-127	" 2K2 " "
R25	02-125	" 1K5 " "
R24	02-153	" 330K " "
R23	02-163	" 2M2 " "
R22	02-125	" 1K5 " "
R21	02-145	" 68K " "
R20	02-139	" 22K " "
R19	02-127	" 2K2 " "
R18	02-123	" 1K " "
* R16	SEE TABLE	" SEE TABLE " "
* R15	" "	" " " " "
R14	02-131	" 4K7 " "
R13	02-123	" 1K " "
R9	02-147	" 100K " "
R8	02-155	" 470K " "
R7	02-148	" 82K " "
R6	02-147	" 100K " "
R5	02-147	" 100K " "
R4	02-118	" 470Ω " "
R3	02-163	" 2M2 " "
R2	02-146	" 82K " "
R1	02-147	" 100K " "

REVISIONS	
D	LINK DELETED D4 ADDED C20 WAS 1·5µF CN 0669 W.L. 5-5-82
'C'	ISSUE 'C' CN 0118 11-2-80 C25 WAS 0·015µF PN 4250 ADDED PN 4355 DELETED ITEMS ADDED ITEMS DELETED
'B'	ISSUE 'B' CN 0084 22-11-79 R19 WAS 1M R16 WAS 1·5µF C15 WAS 0·47µF C25 WAS 0·1µF R34 DELETED

UNLESS OTHERWISE STATED DIMENSIONS IN MILLIMETERS

TOLERANCES
LINEAR 0. ± 0.5
0.0 ± 0.1
HOLE DIA'L + 0.25 −0
ANGULAR ± 0.5°

SCALE 1 : 1

DRAWN S D 19-6-79

CHECKED P.K.

FINISH

MAT'L.

USED ON

MAT'L. N°.

REPLAY PCB ASSY
77 MK V G

R. MEDDING & ASSOCIATES PTY. LTD.
MELBOURNE AUSTRALIA

DRAWING N°.
23-927
23-933

A 3 ISSUE D

* COMPENSATION COMPONENTS			
TYPE	COMPN	PART Nº	VALUE
3.75 / 7.5 I.P.S. DECK I.E.C. 23-928	C4	03-007	0.01 µF 100 V
	C5	03-019	0.0033 µF 100 V
	C6	03-023	0.0068 µF 100 V
	C7	03-016	0.001 µF 100 V
	C10	03-012	0.047 µF 100 V
	C24	03-152	1.5 uF 35 V
7.5 / 15 I.P.S. DECK I.E.C. 23-934	C4	03-023	0.0068 µF 100 V
	C5	03-016	0.001 µF 100 V
	C6	03-018	0.0022 µF 100 V
	C7	03-205	220 pF CERAMIC
	C10	03-152	1.5 uF 35 V
	C24	03-152	1.5 uF 35 V

NOTE

ALL COMPONENTS IN PARTS LISTS AT RIGHT MAKE UP P.C.B. 23-936.

FOR COMPLETED P.C.B.S COMPENSATION COMPONENTS FROM TABLE AT LEFT ARE ADDED.

	①	28-114	P C B BLANK
	②	11-907	TOP BIAS SHIELD
	③	11-908	BOTTOM BIAS SHIELD
18 OFF	④	08-2430	C/N PIN

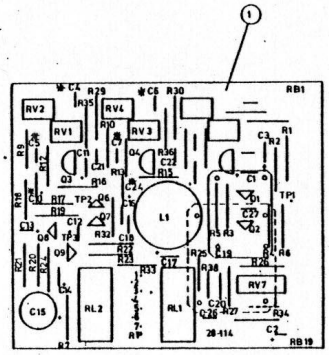

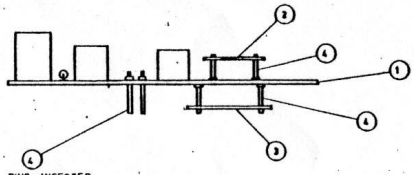

PINS INSERTED FROM TOP

Nº	PART Nº	DESCRIPTION
RV7	02-624	POTENTIOMETER 20K PT-15H
RV4	02-617	" 50K SOANAR HTP
RV3	02-615	" 10K "
RV2	02-617	" 50K "
RV1	02-615	" 10K "
R38	02-118	RESISTOR ¼ W 5% 470 Ω
R36	02-114	RESISTOR ¼ W 5% 220 Ω
R35	02-114	" " " 220 Ω
R34	02-134	" " " 8K2
R33	02-124	" " " 1K2
R32	02-139	" " " 22K
R30	02-135	" " " 10K
R29	02-135	" " " 10K
R27	02-147	" " " 100K
R26	02-131	" " " 4K7
R25	02-147	" " " 100K
R24	02-143	" " " 47K
R23	02-114	" " " 220Ω
R22	02-142	" " " 39K
R21	02-114	" " " 220 Ω
R20	02-135	" " " 10K
R19	02-147	" " " 100K
R18	02-143	" " " 47K
R17	02-153	" " " 330K
R16	02-125	" " " 1K5
R15	02-141	" " " 33K
R13	02-145	" " " 68K
R12	02-145	" " " 68K
R10	02-145	" " " 68K
R9	02-145	" " " 68K
R7	02-101	" " " 10Ω
R6	02-127	" " " 2K2
R5	02-135	" " " 10K
R4	02-151	" " " 220K
R3	02-143	" " " 47K
R2	02-139	" " " 22K
R1	02-139	" " " 22K

Nº	PART Nº	DESCRIPTION
L1'	22-045	POTCORE ASSY.
RL1	20-034	RELAY NATIONAL RS24V
RL2	20-034	" " RS-24V
Q9	10-134	TRANSISTOR PN4250
Q8	10-093	" PN5089
Q7	10-093	" PN5089
Q6	10-093	" PN5089
Q4	10-094	FET 2N5462
Q3	10-094	" 2N5462
Q2	10-093	TRANSISTOR PN5089
Q1	10-093	" PN5089
C27	03-211	CAPACITOR 10pF CERAMIC
C26	03-017	" ·0015uF 100V POLY. FILM.
C24	SEE TABLE	CAPACITOR SEE TABLE TAG TANTALUM
C22	03-007	" ·01uF 100V POLYESTER FILM
C21	03-007	" ·01uF " " "
C20	03-006	" ·1uF " " "
C19	03-007	" ·01uF " " "
C18	03-037	" ·0018uF " "
C17	03-153	" 10uF 25V TAG TANTALUM
C16	03-019	" ·0033uF 100V POLYESTER FILM
C15	03-060	" 100uF 25V RB ELECTRO
C14	03-153	" 10uF 25V TAG TANTALUM
C13	03-176	" 33uF 35V " "
C12	03-018	" ·0022uF 100V POLYESTER FILM
C11	03-152	" 1·5uF 35V TAG TANTALUM
C10	SEE TABLE	" SEE TABLE POLYESTER FILM
C7	SEE TABLE	" SEE TABLE POLYESTER FILM
C6	" "	" " " " "
C5	" "	" " " " "
C4	" "	" " " " "
C3	03-153	" 10uF 25V TAG TANTALUM
C2	03-152	" 1·5uF 35V " "
C1	03-152	" 1·5uF " " "

Nº	PART Nº	DESCRIPTION

ITEM ① TO ④ INC. ADDED
C27 WAS 15pF
C18 WAS ·0022µF
R PINS 23-934 ADDED
COMPENSATION TABLE ADDED
C/N 0441 ADDED 15-2-80
R 38 ADDED 15-8-80
R 35 WAS 100Ω
R 34 WAS 10K
C4 WAS ·0047µF
C5 WAS ·0033µF
C6 WAS ·0015µF
C/N 0094 ADDED 22-11-79
D C

REVISIONS

UNLESS OTHERWISE STATED DIMENSIONS IN MILLIMETERS
TOLERANCES
LINEAR 0. ± 0.6
0.0 ± 0.1
HOLE DIA'S. + 0.25 − 0
ANGULAR ± 0.5°

SCALE 1:1
DRAWN S D 7-6-79
CHECKED P Ray

FINISH
MAT'L.

RECORD P.C.B. ASSY.
77 MK V G

R. MEDDING & ASSOCIATES PTY. LTD.
MELBOURNE AUSTRALIA

USED ON
MAT'L. Nº.
3rd ANGLE PROJ.
DRAWING Nº.
23-928
23-934
A 3 ISSUE E

TOP

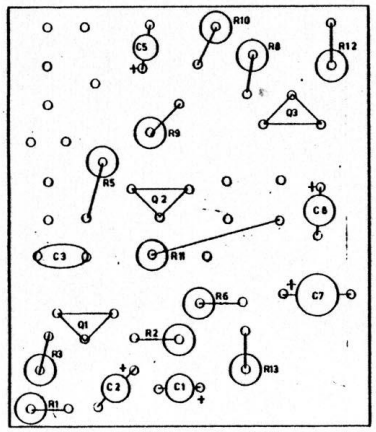

BOTTOM

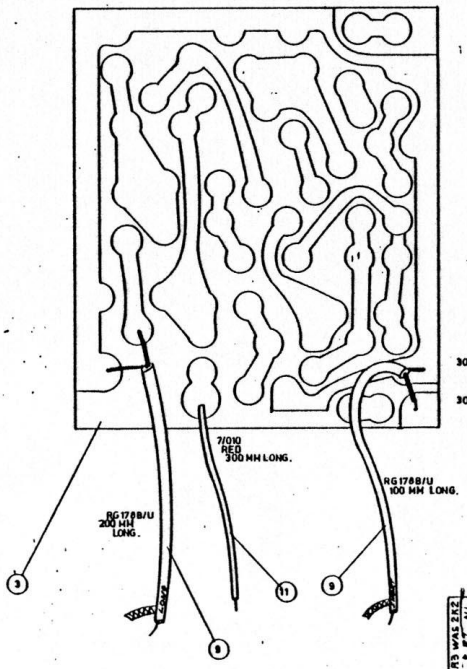

NOTE:
ALL RESISTORS STAND ON END
CIRCUIT REFERENCE 23-2089

COMP N°	PART N°	DESCRIPTION	COMP N°	PART N°	DESCRIPTION
			Q 3	10-093	TRANSISTOR PN5089
			Q 2	10-093	" PN5089
			Q1	10-093	" PN5089
			C 8	03-170	CAPASITOR 47µF 25V TAG TANTALUM
			C 7	03-153	" 10µF 25V " "
			C5	03-153	" 10µF 25V TAG TANTALUM
			C 3	03-207	" 150pF CERAMIC "PHILIPS"
			C 2	03-172	" 22µF 35V TAG TANTALUM
			C 1	03-152	" 1·5µF 35V " "
			R 13	02-121	RESISTOR 680Ω 1/4W 5%
			R 12	02-135	" 10 K " "
300MM	11	08-0003 HOOKUP WIRE 7/010 RED	R 11	02-135	" 10 K " "
	10		R 10	02-130	" 3K9 " "
300MM	9	08-0195 CO-AX TEFLON RG178 B/U	R 9	02-110	" 100 Ω " "
	8		R 8	02-141	" 33 K " "
	7				
	6		R 6	02-153	" 330 K " "
	5		R 5	02-153	" 330 K " "
	4				
	3	03-4451 MIC PRE AMP PCB.	R 3	02-116	" 330Ω " "
	2		R 2	02-141	" 33K " "
	1		R 1	02-127	" 2K2 " "

REVISIONS

B — R10 WAS 6K2, R3 WAS 2K2, C4, C5, R4 & R7 ALL DELETED. QUAD 18-3-80

UNLESS OTHERWISE STATED DIMENSIONS IN MILLIMETERS
TOLERANCES
LINEAR 0. ± 0.5
0.0 ± 0.1
HOLE DIA'S. + 0.25 − 0
ANGULAR ± 0.5°

SCALE 4 : 1
DRAWN S.D. 1-8-79
CHECKED

FINISH
MAT'L.

MIC PRE-AMP
P.C.B. ASS'Y
77 MK. V. G.

R. MEDDING & ASSOCIATES PTY. LTD.
MELBOURNE AUSTRALIA

USED ON
MAT'L. Nº.
3rd ANGLE PROJ.
DRAWING Nº.
23-929
A 3 ISSUE B

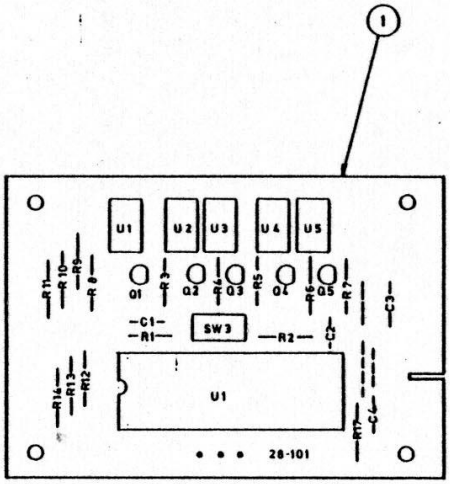

COMP N°	PART N°	DESCRIPTION
R17	02-147	RESISTOR 100K ¼W CARBON FILM
R14	02-123	RESISTOR 1K ¼W CARBON FILM
R13	"	" " " " "
R12	"	" " " " "
R11	"	" " " " "
R10	"	" " " " "
R9	"	" " " " "
R8	"	" " " " "
R7	02-131	" 4K7 " " "
R6	"	" " " " "
R5	"	" " " " "
R4	"	" " " " "
R3	"	" " " " "
R2	02-135	" 10K " " "
R1	"	" " " " "
SW3	08-3168	SWITCH P.B. C&K8125V3
U6	10-197	7 SEG. NUMERICAL DISPLAY FND367
U5	"	" " " "
U4	"	" " " "
U3	"	" " " "
U2	"	" " " "
U1	10-190	6 DEC. CLOCK COUNTER MM50396N
-	08-2216	I.C. SOCKET : 40-PIN
Q5	10-127	TRANSISTOR PN3643
Q4	"	" "
Q3	"	" "
Q2	"	" "
Q1	"	" "
C4	03-172	CAPACITOR 2,2µF 35V TANTALUM
C3	03-157	" 47µF 16V "
C2	03-007	" 0,01µF POLYESTER FILM
C1	03-012	" 0,047µF " "
1	28-101	BLANK PCB

UNLESS OTHERWISE STATED DIMENSIONS IN MILLIMETERS
TOLERANCES
LINEAR ± 0.5
ANGULAR ± 0.5°

REVISIONS

SCALE 1:1
DRAWN BHP 19-12-80
CHECKED

REFER 23-2072
MAT'L.

COMPONENT LAYOUT
REMOTE CONTROL UNIT
77 MK V G

R. MEDDING & ASSOCIATES PTY. LTD.
MELBOURNE AUSTRALIA

USED ON
MAT'L. No.
3rd ANGLE PROJ.
DRAWING No.
23-930
A3 ISSUE A

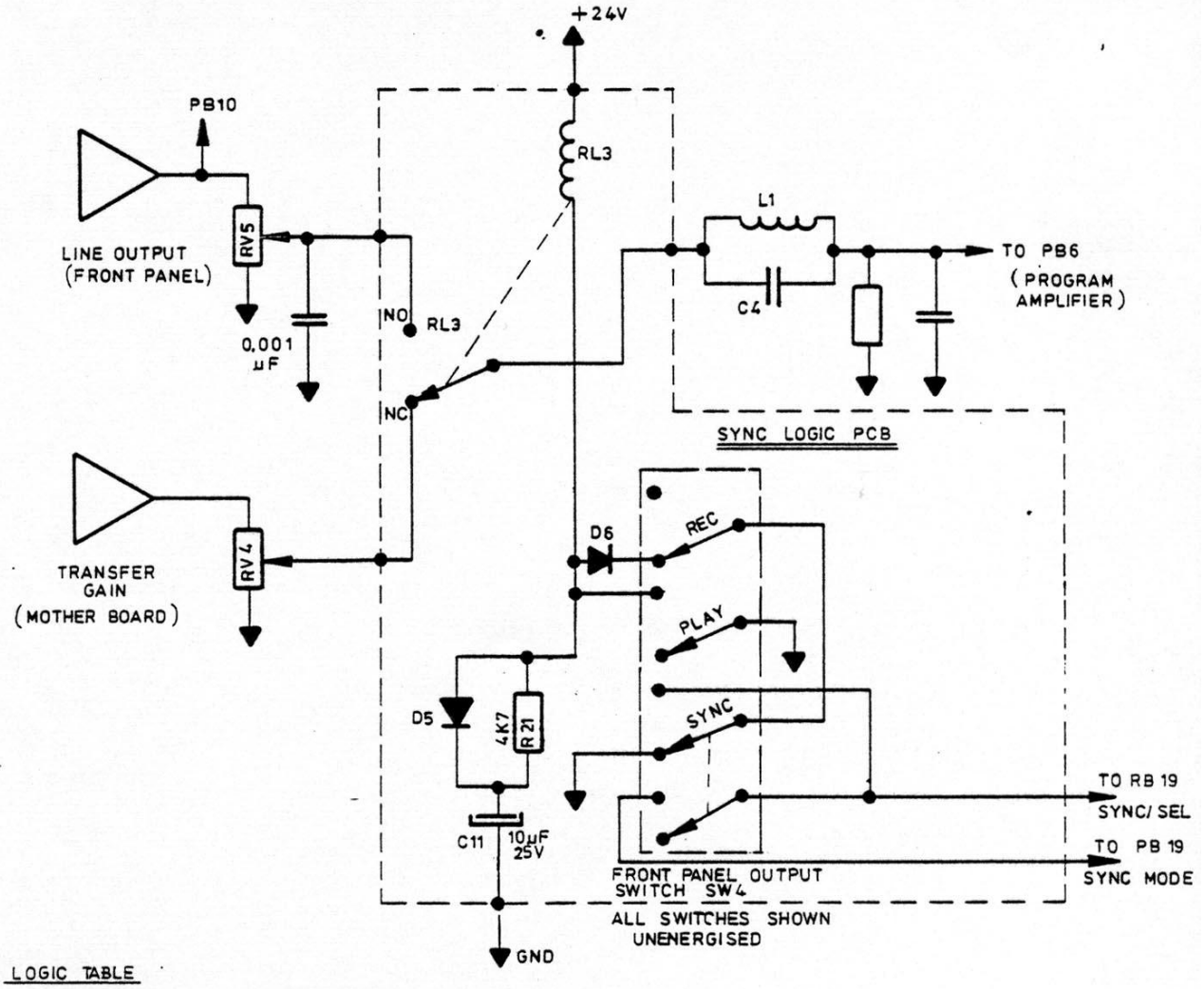

LOGIC TABLE

SWITCH SELECTED			LINE OUTPUT		
REC	PLAY	SYNC	REPLAY MODE	RECORD MODE	
1	0	0	LINE I/P	LINE I/P	SINGLE BUTTON OPERATION
X	1	0	REPLAY HEAD	REPLAY HEAD	
0	0	1	RECORD HEAD	LINE I/P	
X	1	1	RECORD HEAD	REPLAY HEAD	
0	0	0	REPLAY HEAD	REPLAY HEAD	

0 – UNENERGISED
1 – ENERGISED
X – DON'T CARE

CONNECTION
NOT CONNECTED

REFERENCE DRAWINGS

SYNC LOGIC PCB 28-135

REDRAWN C/N 0877 AHP 17-3-81	UNLESS OTHERWISE STATED DIMENSIONS ARE IN MILLIMETERS TOLERANCES LINEAR ± 0.5 ANGULAR ± 0.5° SCALE NTS	FINISH —	USED ON 23-923	
		MAT'L.	MAT'L. No.	
		CIRCUIT DIAGRAM SYNC LOGIC PCB 77 MK V G		
			DRAWING No. 23-942 SHEET 2 OF 2	
B	AHP 23-10-80 28-10-80	... & ASSOCIATES PTY. LTD. MELBOURNE AUSTRALIA ©	A4	ISSUE E

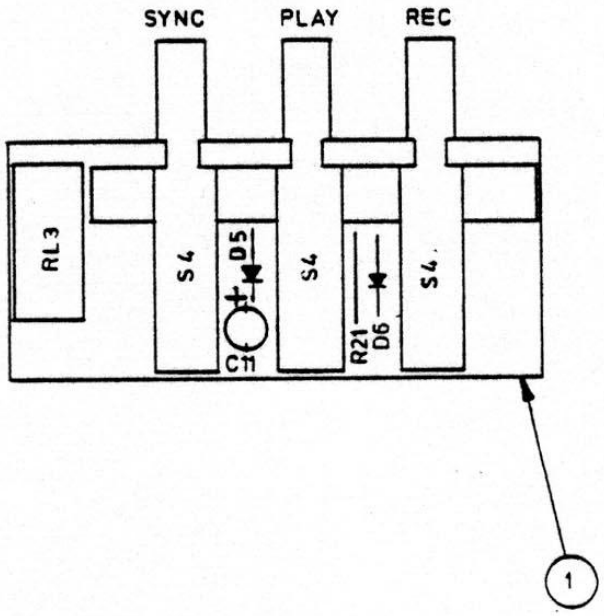

NO	PART NO	DESCRIPTION
1	28-135	BLANK PCB
S4	08-3177	ISOSTAT SWITCH 3 GANG (BLACK)
RL3	20-034	RELAY NATIONAL RS 24V
C11	03-153	CAPACITOR 10µF 25V TANTALUM
R21	02-131	RESISTOR 4K7 1/4 WATT
D6	10-037	DIODE IN914
D5	10-037	DIODE IN914

REVISIONS

UNLESS OTHERWISE STATED DIMENSIONS IN MILLIMETERS

TOLERANCES
LINEAR ± 0.5

ANGULAR ± 0.5°

SCALE 1:1

DRAWN A.H.P 24·10·80

CHECKED

FINISH

MAT'L.

USED ON

MAT'L. No.

COMPONENT LAYOUT
SYNC LOGIC PCB
77 MK V G

3rd ANGLE PROJ.

DRAWING No.
23-942
SHEET 1 OF 2

R. MEDDING & ASSOCIATES PTY. LTD.
MELBOURNE AUSTRALIA ©

A4 ISSUE B

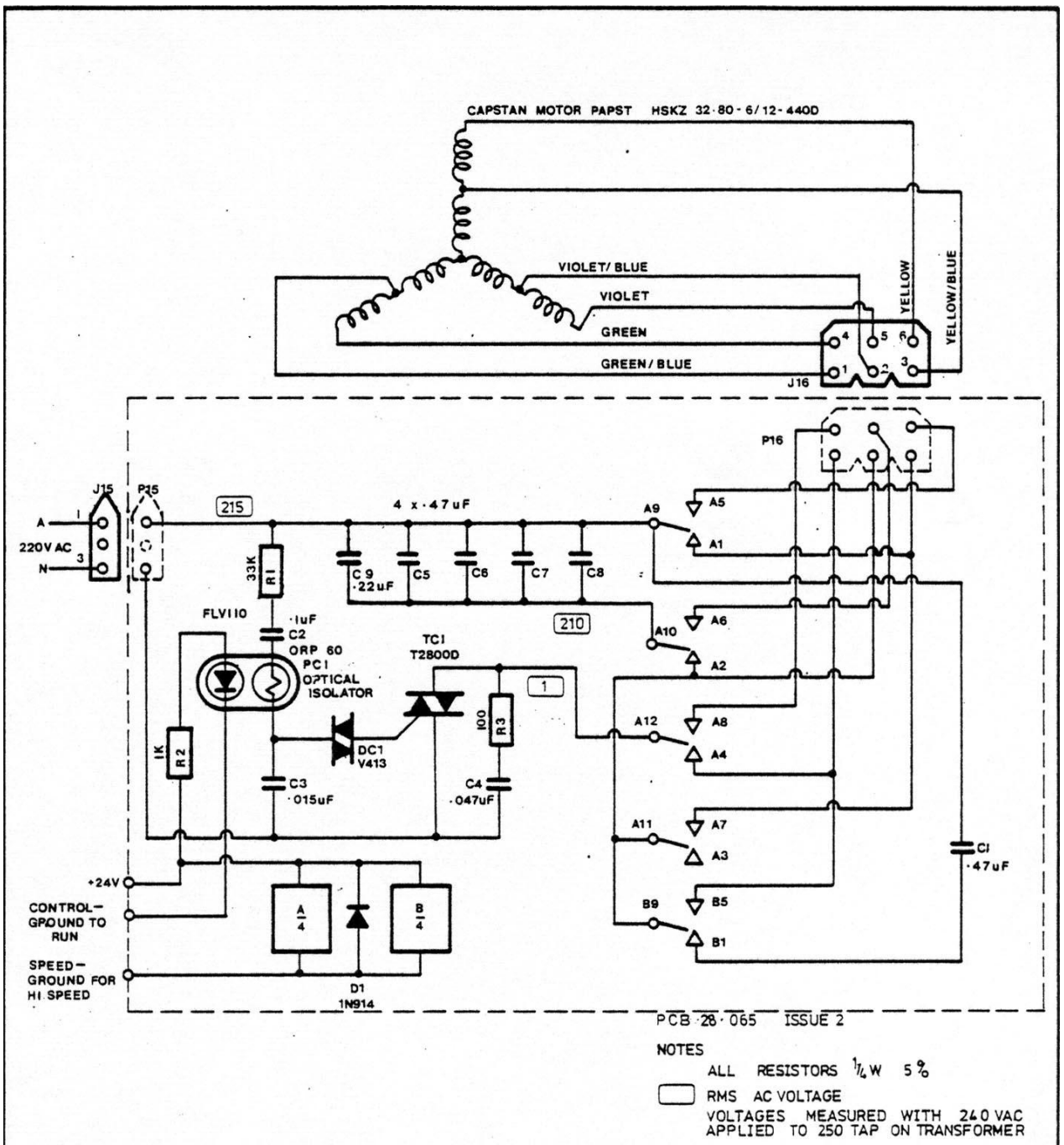

PCB 28·065 ISSUE 2

NOTES

ALL RESISTORS 1/4 W 5%

[ ] RMS AC VOLTAGE

VOLTAGES MEASURED WITH 240 VAC APPLIED TO 250 TAP ON TRANSFORMER

	C9 ADDED. LD. 9-7-79.	REVISIONS	UNLESS OTHERWISE STATED DIMENSIONS IN MILLIMETERS TOLERANCES LINEAR 0. ± 0.5 0.0 ± 0.1 HOLE DIA'S. + 0.25 − 0 ANGULAR ± 0.5°	FINISH	USED ON
				MAT'L.	MAT'L. No.
				CAPSTAN MOTOR CONTROL PCB CIRCUIT CM2000/77MkV	3 ANGLE PROJ.
			SCALE		DRAWING No. 23-1326
			DRAWN J. BANOS 21-9-77	R. MEDDING & ASSOCIATES PTY. LTD. MELBOURNE AUSTRALIA	
	B	ISS	CHECKED T. HANSEN 31-8-78		A 4 ISSUE B

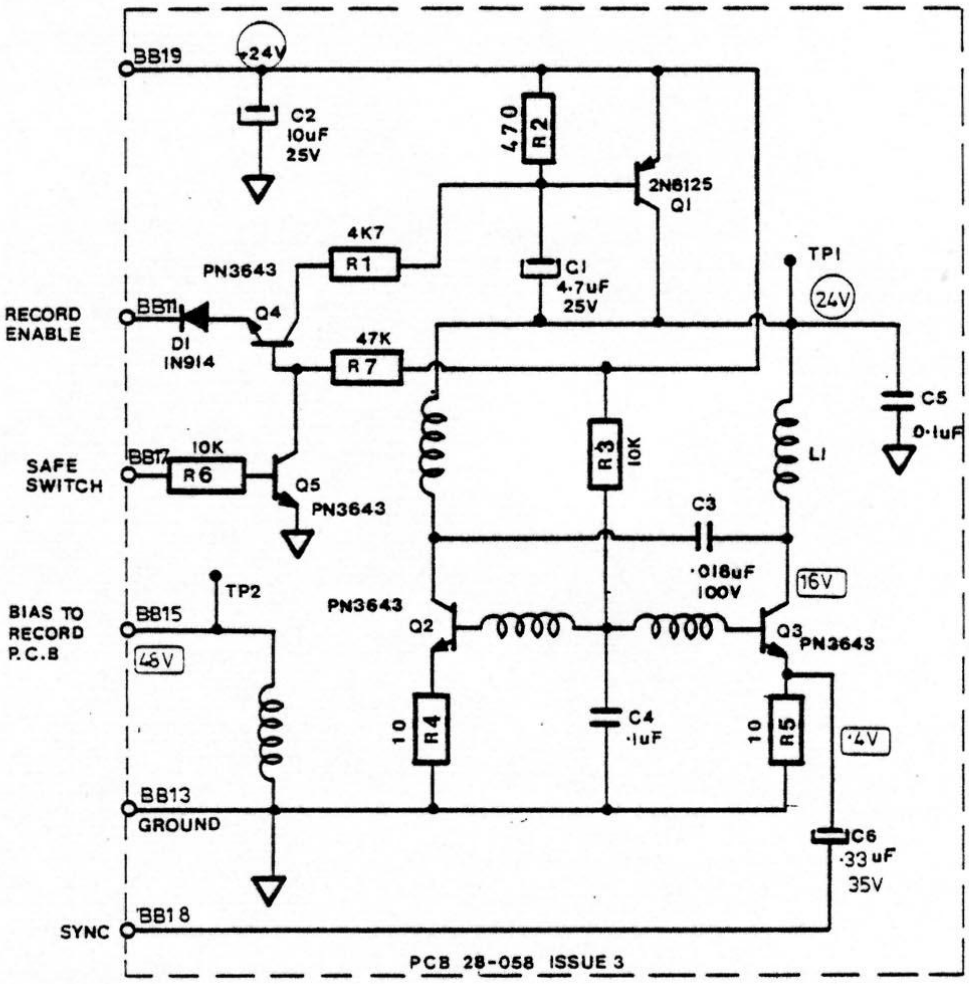

LAST USED Q5
R7
C6
D1
L1

NOTES

1 UNLESS OTHERWISE STATED ALL RESISTORS 1/4W 5%

2 C3 PHILLIPS POLYESTER 160V

○ DC VOLTAGES

▭ RMS AC VOLTAGES

5 ALL VOLTAGES MEASURED WHILE RECORDING 1KHZ AT OVU IN CAL MODE.

6 ALL VOLTAGES MEASURED WITH HIGH IMPEDANCE METER (> 10MΩ)

77 Mk V Bias Oscillator -Synchronized

D	R2 WAS 270 Ω C/N 0094. 28-11-79 PK C/N 491. C6 ALTERED WAS .1uF		UNLESS OTHERWISE STATED DIMENSIONS IN MILLIMETERS TOLERANCES LINEAR 0. ± 0.5 0.0 ± 0.1 HOLE DIA'S. + 0.25 − 0 ANGULAR ± 0.5°	FINISH	USED ON
C	S.D. 10-7-78. T.H. PK NOTES ADDED. S.Q. 2-8-79 R4 & R5 WERE 33 Ω	REVISIONS	SCALE	MAT'L.	MAT'L. No.
B			DRAWN J. BANOS 20-11-77	BIAS OSCILLATOR SYNCHRONIZED PCB CIRCUIT 77MkV	3rd ANGLE PROJ. DRAWING No. 23-1329
			CHECKED T. HANSEN 26-7-78 PK	R. MEDDING & ASSOCIATES PTY. LTD. MELBOURNE AUSTRALIA	A 4 ISSUE D

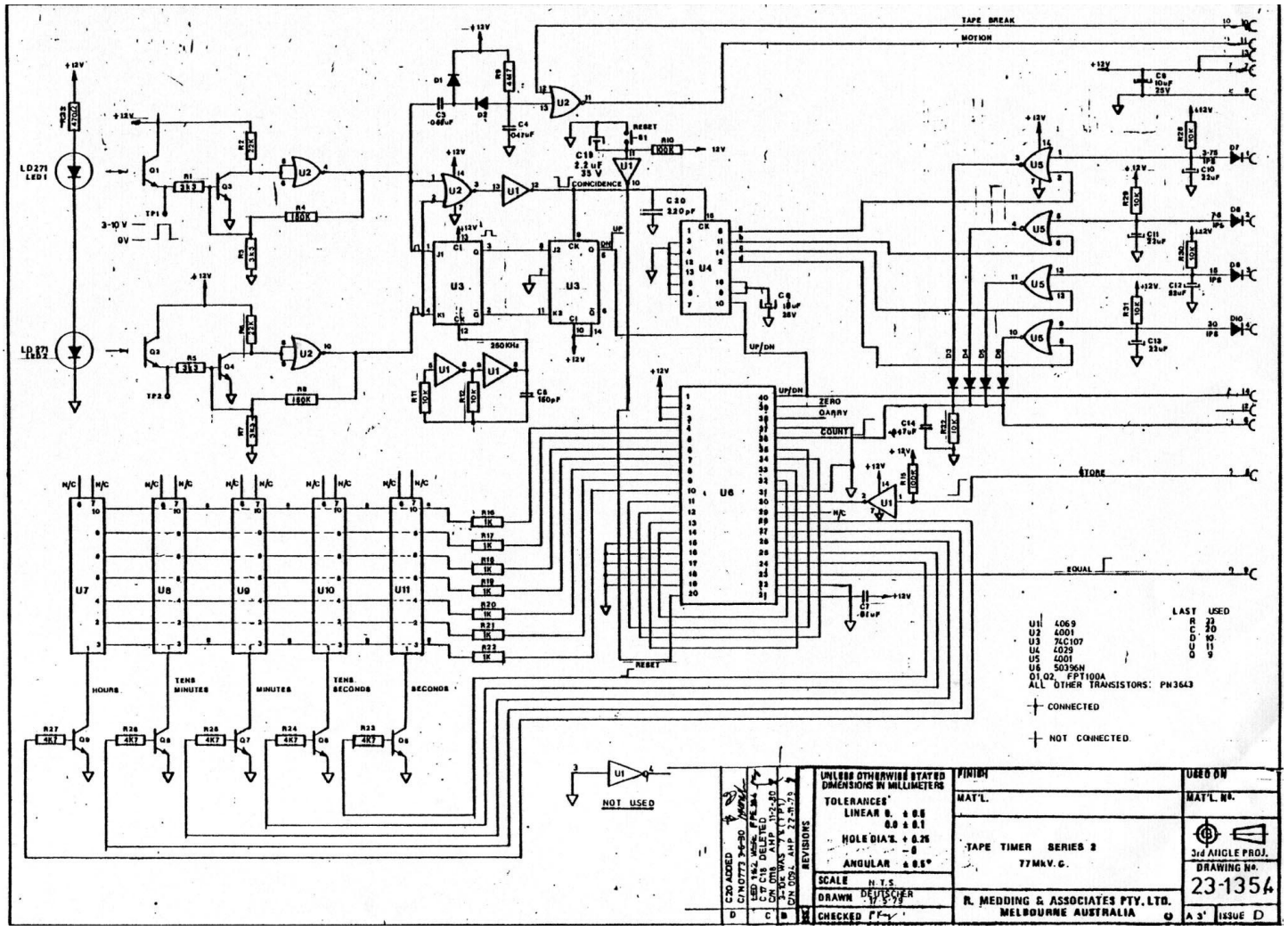
TAPE BREAK
MOTION
LD271 LED1
LD271 LED2
COINCIDENCE
RESET
UP/DN
ZERO
CARRY
COUNT
TONE
EQUAL
HOURS
TENS MINUTES
MINUTES
TENS SECONDS
SECONDS
NOT USED
LAST USED
U1 4069 R 22
U2 4001 C 20
U3 74C107 D 10
U4 4029 U 11
U5 4001 Q 9
U6 50396N
D1,D2 FPT100A
ALL OTHER TRANSISTORS: PN3643
CONNECTED
NOT CONNECTED
UNLESS OTHERWISE STATED DIMENSIONS IN MILLIMETERS
TOLERANCES
LINEAR 0. ± 0.5
0.0 ± 0.1
HOLE DIA'S + 0.25 − 0
ANGULAR ± 0.5°
SCALE N.T.S.
DRAWN DEUTSCHER 17.5.79
CHECKED
REVISIONS
C20 ADDED C/N 0773 3-6-80
LED 1&2 MODIFIED C17 C18 DELETED C/N 0794 ANP 22.11.79
FINISH
MAT'L.
USED ON
MAT'L. No.
TAPE TIMER SERIES 2
77MKV.G.
3rd ANGLE PROJ.
DRAWING No.
23-1354
R. MEDDING & ASSOCIATES PTY. LTD.
MELBOURNE AUSTRALIA
A 3'
ISSUE D

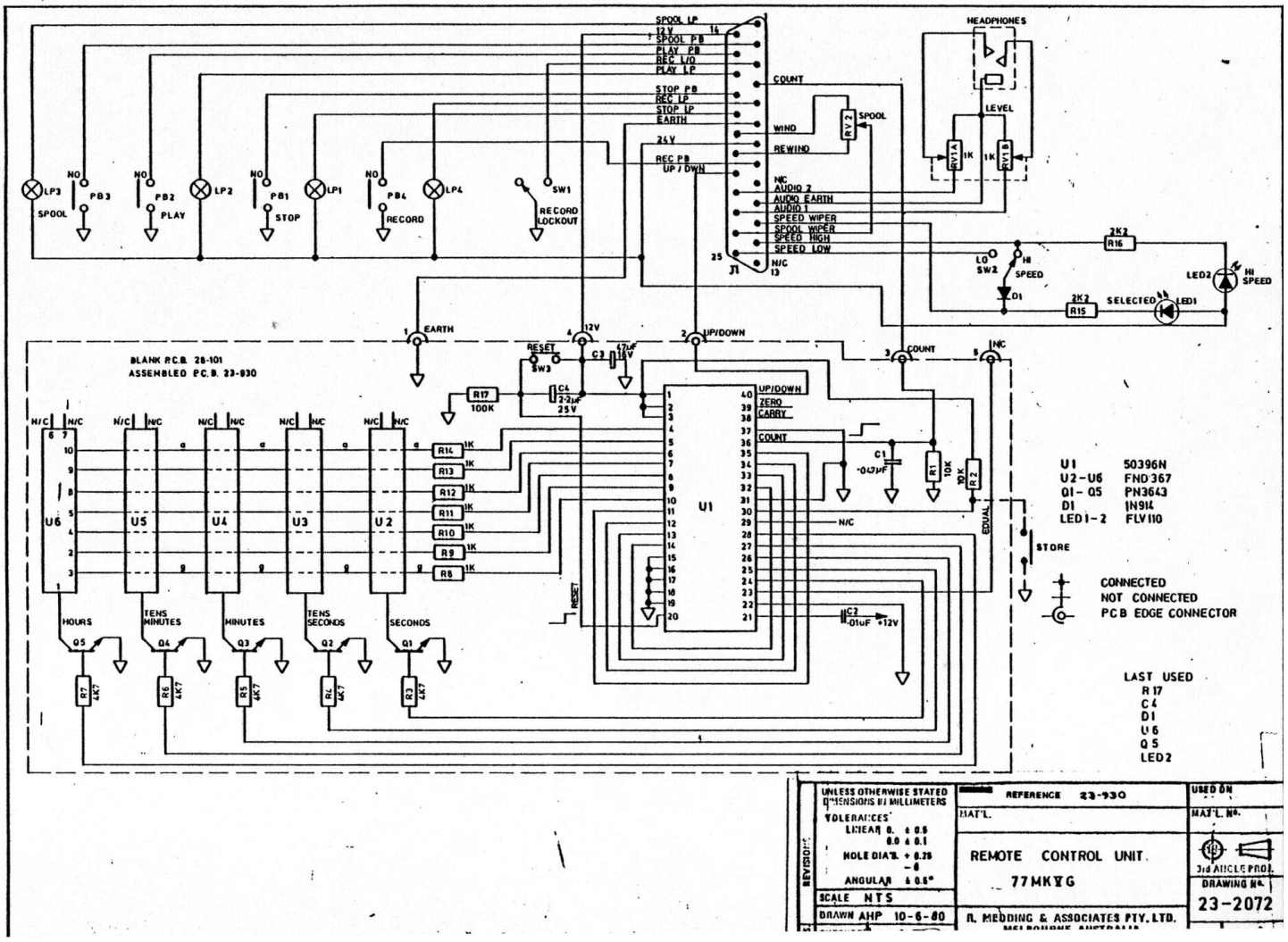
SPOOL LP
12V
SPOOL PB
PLAY PB
REC L/O
PLAY LP
STOP PB
REC LP
STOP LP
EARTH
24V
REC PB
UP/DWN
COUNT
WIND
REWIND
N/C
AUDIO 2
AUDIO EARTH
AUDIO 1
SPEED WIPER
SPOOL WIPER
SPEED HIGH
SPEED LOW
N/C
J1
HEADPHONES
LEVEL
RV1A
RV1B
1K
RV2
SPOOL
LP3
SPOOL
PB3
PB2
PLAY
LP2
PB1
STOP
LP1
PB4
RECORD
LP4
SW1
RECORD LOCKOUT
LO
SW2
HI
SPEED
D1
2K2
R16
LED2
HI SPEED
2K2
R15
SELECTED
LED1
EARTH
RESET
SW3
12V
C3
47uF 16V
UP/DOWN
COUNT
N/C
BLANK P.C.B. 28-101
ASSEMBLED P.C.B. 23-930
R17
100K
C4
2·2uF
25V
U1
UP/DOWN
ZERO
CARRY
COUNT
N/C
C1
·047uF
R1
10K
R2
10K
EQUAL
STORE
U6
U5
U4
U3
U2
R14
R13
R12
R11
R10
R9
R8
1K
HOURS
TENS MINUTES
MINUTES
TENS SECONDS
SECONDS
Q5
Q4
Q3
Q2
Q1
R7
R6
R5
R4
R3
4K7
RESET
C2
·01uF
+12V
U1 50396N
U2-U6 FND367
Q1-Q5 PN3643
D1 1N914
LED1-2 FLV110
CONNECTED
NOT CONNECTED
PCB EDGE CONNECTOR
LAST USED
R17
C4
D1
U6
Q5
LED2
UNLESS OTHERWISE STATED DIMENSIONS IN MILLIMETERS
TOLERANCES
LINEAR 0. ± 0.5
0.0 ± 0.1
HOLE DIA'L. +0.25 −0
ANGULAR ± 0.5°
SCALE NTS
DRAWN AHP 10-6-80
REVISIONS
REFERENCE 23-930
MAT'L.
REMOTE CONTROL UNIT
77MKVG
R. MEDDING & ASSOCIATES PTY. LTD.
USED ON
MAT'L. No.
3rd ANGLE PROJ.
DRAWING No.
23-2072

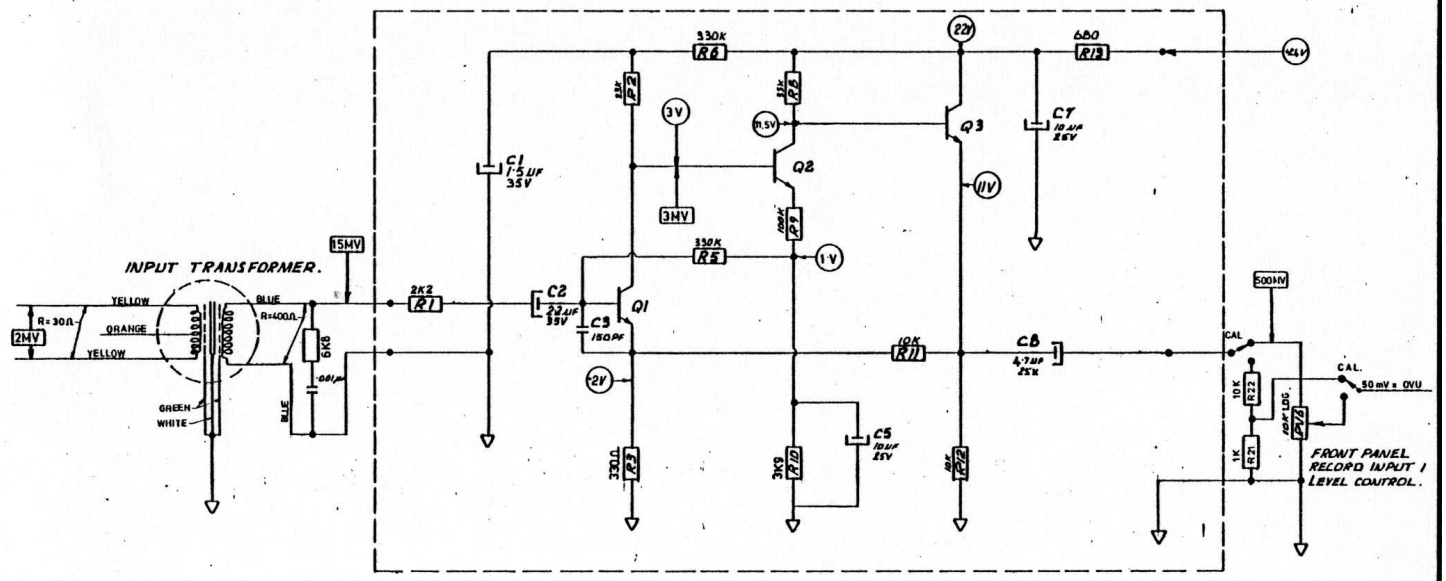

ALL TRANSISTORS PN5089
RESISTORS ¼W 5% C.C.
DC VOLTAGES.
AC VOLTAGES MEASURED RECORDING 1K AT 0VU CAL.MODE.

LAST USED: Q3
R13
C9

CAL. SWITCHES NOW GROUND R21 & R22 ADDED. MAT'L C.R. & R.E. ADDED.	P	5	B	REVISIONS	UNLESS OTHERWISE STATED DIMENSIONS IN MILLIMETERS TOLERANCES LINEAR 0. ± 0.5 0.0 ± 0.1 HOLE DIA'L + 0.15 − 0 ANGULAR ± 0.5°	FINISH MAT'L. NIC. PRE AMP. CIRCUIT. 77 MK IV G	USED ON MAT'L No.
NO WAS BYE. R9 WAS 2.K2 C4, C6, R4, R7, & C9					SCALE N.T.S.		3rd ANGLE PROJ. DRAWING No. 23·2089.
ALL DELETED C14 0035-2018 R.E.NO. 1 C1 0040 CAPACITOR 1.5MFD					DRAWN K.DELFSMA 12.8.72.	R. MEDDING & ASSOCIATES PTY. LTD. MELBOURNE AUSTRALIA	A3 ISSUE D
					CHECKED P.K.		

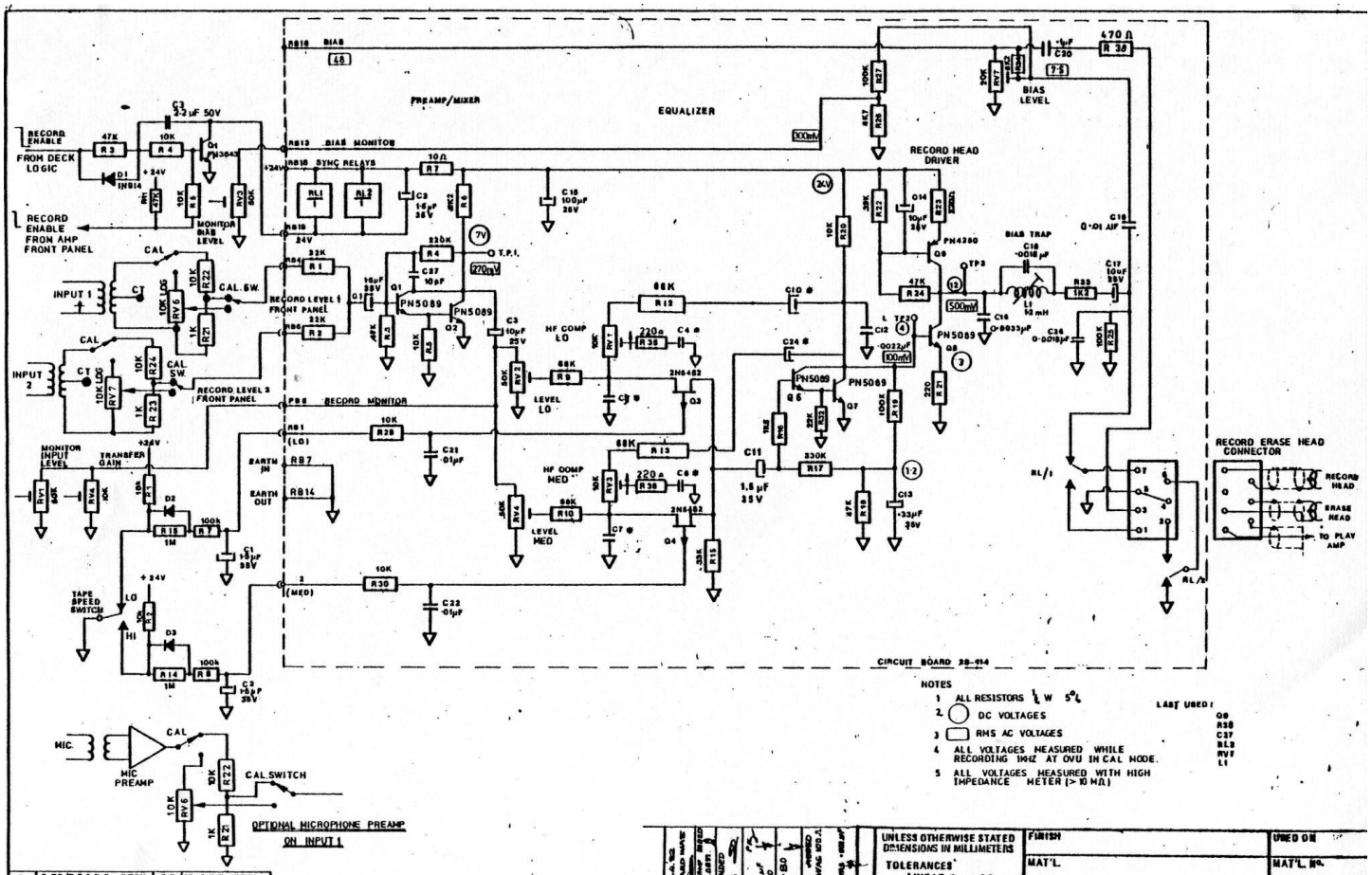

NOTES

1. ALL RESISTORS ½ W 5%
2. ○ DC VOLTAGES
3. ▭ RMS AC VOLTAGES
4. ALL VOLTAGES MEASURED WHILE RECORDING 1KHZ AT 0VU IN CAL MODE.
5. ALL VOLTAGES MEASURED WITH HIGH IMPEDANCE METER (>10 MΩ)

LAST USED:
Q9
R38
C37
RL3
RV7
L1

* COMP	3·75/7·5 I.P.S. DECK IEC	NAB	7·5/15 I.P.S. DECK IEC	NAB
C 4	·01 µF	·01 µF	·0068 µF	·0068 µF
C 5	·0033 µF	·0033 µF	·001 µF	·001 µF
C 6	·0068 µF	·0068 µF	·0022 µF	·0022 µF
C 7	·001 µF	·001 µF	220 pF	220 pF
C 10	·047 µF	·047 µF	·15µF 35v	·047 µF
C24	1·5µF 35v	·047 µF	1·5µF 35v	·047 µF

REVISIONS	
D	D/N 04652. TC 23-4-73. C5 WAS 1000PF. BOARD NAME CHANGED TO 28-914.
F	R12, 22, 23, 31, 38, R-PAD 8R2 CHANGED TO 8R2. CAL. SW. ADDED ON 0295.089.
	RECORD ENABLE AMENDED
	PRELIM ISSUE. JAN 25-7-83
	C27 WAS 15 µF. C18 WAS ·0022 µF. C4 DOTS 1/2-80
	R.38 ADDED 1/2-80
	COMPONENTS TABLE AMENDED. R.33 WAS 100 Ω. R.34 WAS 100 Ω. C5 WAS ·0033 µF. C7 WAS ·001 µF. C6 WAS ·0047 µF. D/N 00594 22-11-79

UNLESS OTHERWISE STATED DIMENSIONS IN MILLIMETERS

TOLERANCES
LINEAR 0. ± 0.5
0.0 ± 0.1
HOLE DIA'S ⌀ 0.25 −0
ANGULAR ± 0.5°

SCALE N.T.S.
DRAWN Rodgers 16.6.78
CHECKED P.K.

FINISH
MAT'L.
USED ON
MAT'L. No.

RECORD PCB CIRCUIT
77MKV G

3rd ANGLE PROJ.
DRAWING No. 23-2091

R. MEDDING & ASSOCIATES PTY. LTD.
MELBOURNE AUSTRALIA

A 3 ISSUE G

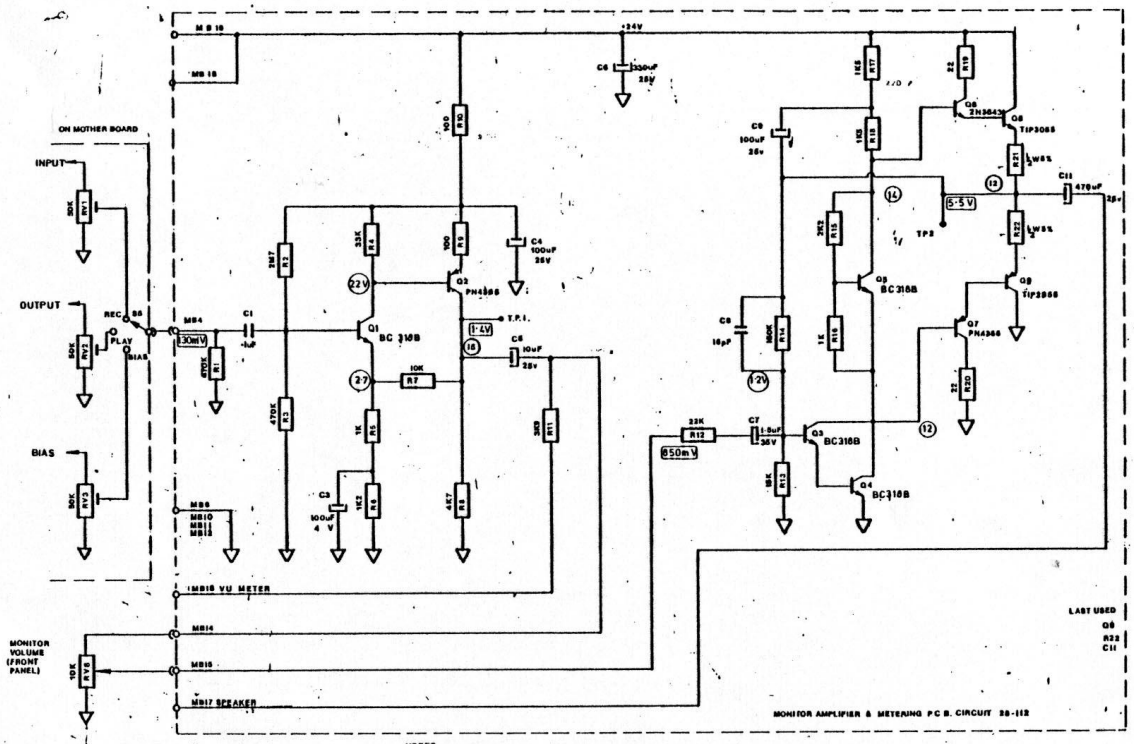

NOTES
1 ALL RESISTORS ½W 5% UNLESS OTHERWISE STATED
2 (12) DC VOLTAGES
3 [12] RMS AC VOLTAGES
4 ALL VOLTAGES MEASURED WHILE RECORDING 1KHZ AT 0VU IN CAL MODE AND MONITOR POT SET FOR 2WATTS OUTPUT INTO A 15Ω LOAD.
5 ALL VOLTAGES MEASURED WITH HIGH IMPEDANCE METER (> 10MΩ)

REVISED A.M.P. 11-2-80 B	UNLESS OTHERWISE STATED DIMENSIONS IN MILLIMETRES TOLERANCES LINEAR 0. ± 0.5; 0.0 ± 0.1; HOLE DIA'S. +0.25 −0; ANGULAR ± 0.5°	FINISH	USED ON
		MAT'L.	MAT'L. No.
		MONITOR AMP P.C.B. CIRCUIT 77MKV G	3rd ANGLE PROJ.
	SCALE NTS		DRAWING No. 23-2092
	DRAWN DEUTSCHER 16-5-79	N. HEDDING & ASSOCIATES PTY. LTD. MELBOURNE AUSTRALIA	A3 ISSUE B

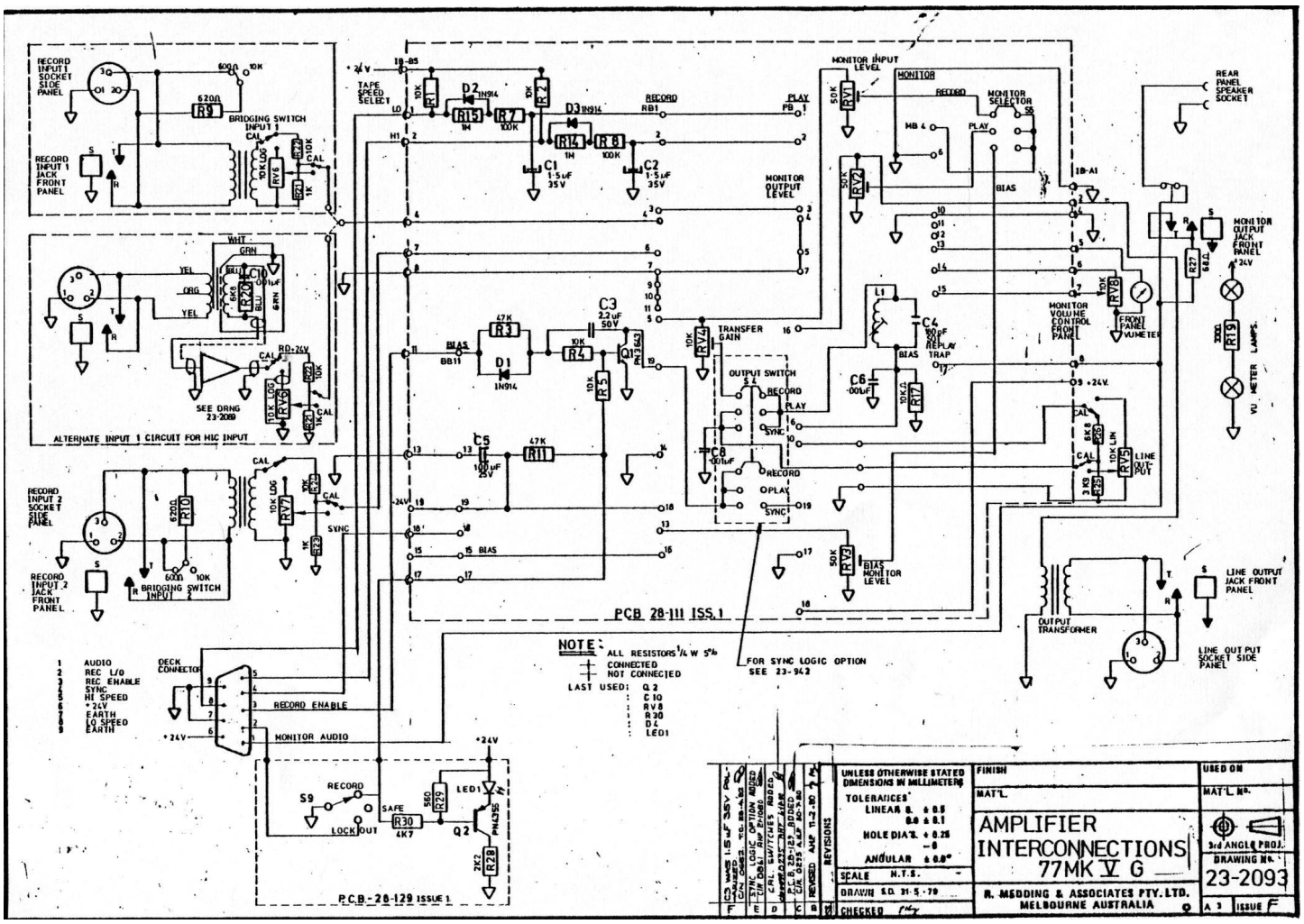
RECORD INPUT 1 SOCKET SIDE PANEL
RECORD INPUT 1 JACK FRONT PANEL
BRIDGING SWITCH INPUT 1
TAPE SPEED SELECT
MONITOR INPUT LEVEL
MONITOR
MONITOR SELECTOR
REAR PANEL SPEAKER SOCKET
MONITOR OUTPUT JACK FRONT PANEL
MONITOR OUTPUT LEVEL
TRANSFER GAIN
OUTPUT SWITCH
MONITOR VOLUME CONTROL FRONT PANEL
FRONT PANEL VUMETER
VU METER LAMPS
ALTERNATE INPUT 1 CIRCUIT FOR HIC INPUT
SEE DRNG 23-2089
RECORD INPUT 2 SOCKET SIDE PANEL
RECORD INPUT 2 JACK FRONT PANEL
BRIDGING SWITCH INPUT 2
BIAS MONITOR LEVEL
LINE OUTPUT
LINE OUTPUT JACK FRONT PANEL
LINE OUTPUT SOCKET SIDE PANEL
OUTPUT TRANSFORMER
PCB 28-111 ISS.1
NOTE:
ALL RESISTORS 1/4 W 5%
CONNECTED
NOT CONNECTED
LAST USED: Q 2
C 10
RV 8
R 20
D 1
LED1
FOR SYNC LOGIC OPTION SEE 23-942
DECK CONNECTOR
1 AUDIO
2 REC L/O
3 REC ENABLE
4 SYNC
5 HI SPEED
6 +24V
7 EARTH
8 LO SPEED
9 EARTH
RECORD ENABLE
MONITOR AUDIO
PCB-28-129 ISSUE 1
UNLESS OTHERWISE STATED DIMENSIONS IN MILLIMETERS
TOLERANCES
LINEAR
HOLE DIA'L
ANGULAR
SCALE N.T.S.
DRAWN
CHECKED
REVISIONS
FINISH
MAT'L
USED ON
MAT'L No.
AMPLIFIER INTERCONNECTIONS 77MK V G
R. MEDDING & ASSOCIATES PTY. LTD. MELBOURNE AUSTRALIA
3rd ANGLE PROJ.
DRAWING No.
23-2093
A 3
ISSUE F

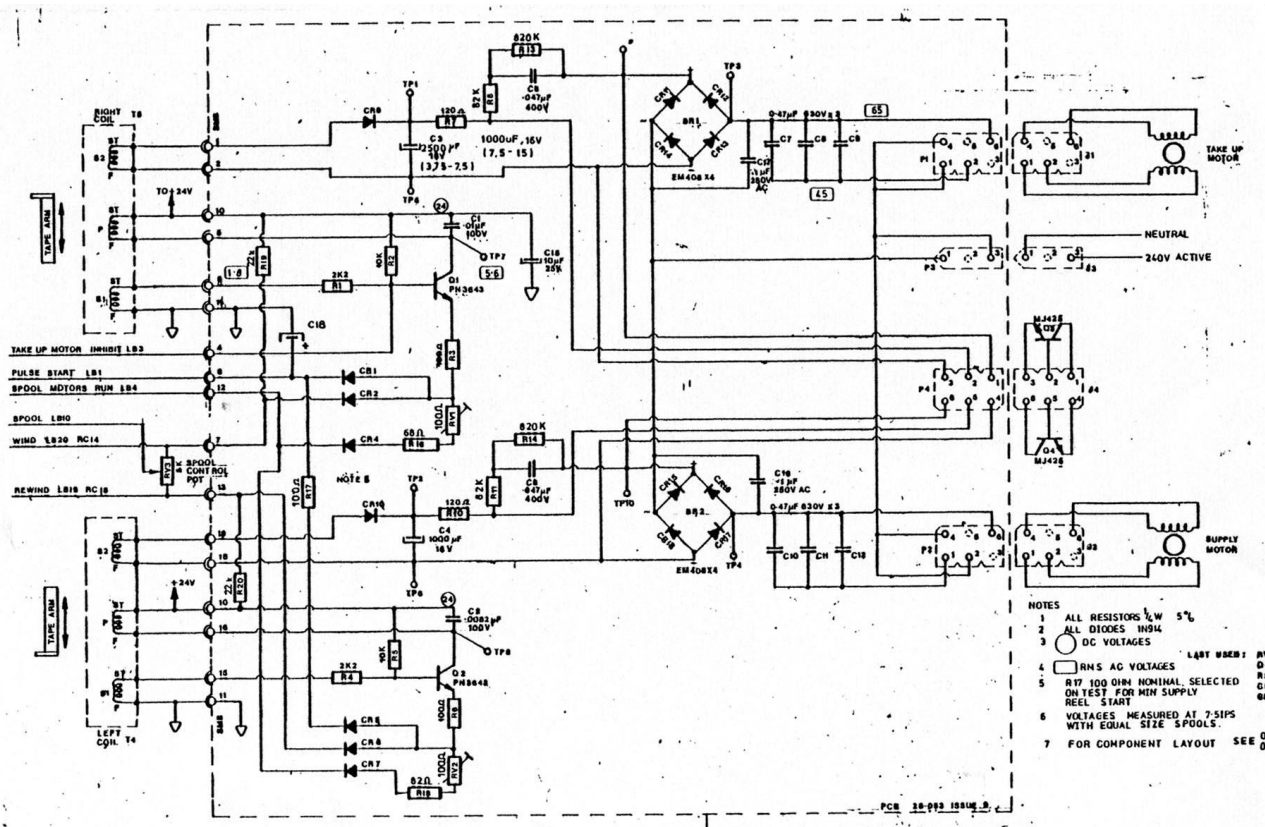

NOTES

1. ALL RESISTORS ¼W 5%
2. ALL DIODES 1N914
3. ○ DC VOLTAGES
4. ▭ RMS AC VOLTAGES
5. R17 100 OHM NOMINAL, SELECTED ON TEST FOR MIN SUPPLY REEL START
6. VOLTAGES MEASURED AT 7·5IPS WITH EQUAL SIZE SPOOLS.
7. FOR COMPONENT LAYOUT SEE 02300921 (A3) 02302364.

LAST USED: RV1 D4 R20 C17 GR18

REVISIONS		
F	C692 30-11-81	RV1 WAS 100Ω, R20 WAS 120Ω. RV1 AND RV2 WERE 50Ω CHG DAT AJLF 14-9-81
E		R16 WAS 68Ω, R18 WAS 1.8Ω.
D		T3-WITH 2.2Ω WIRE, R5 & R11 WERE 220K & R6 & R14 WERE 820K CH DOTS & DIBS. 12-2-80
C		R17 WAS 22Ω CH 0458 12-2-80
B		R19 & R20 WERE 56K C3 WAS 3300µF CH DOTS. 23-5-79

UNLESS OTHERWISE STATED DIMENSIONS IN MILLIMETERS

TOLERANCES
LINEAR ± 0.5
0.8 ± 0.1
HOLE DIA ± 0.25 −0
ANGULAR ± 0.5°

SCALE N.T.S.
DRAWN J. Banios 28-11-77
CHECKED

FINISH
MAT'L.
SPOOLING MOTOR CONTROL
PCB CIRCUIT
77 MKV Q

USED ON
MAT'L No.
3rd ANGLE PROJ.
DRAWING No. 23-2094
A 1 ISSUE F

R. MEDDING & ASSOCIATES PTY. LTD.
MELBOURNE AUSTRALIA

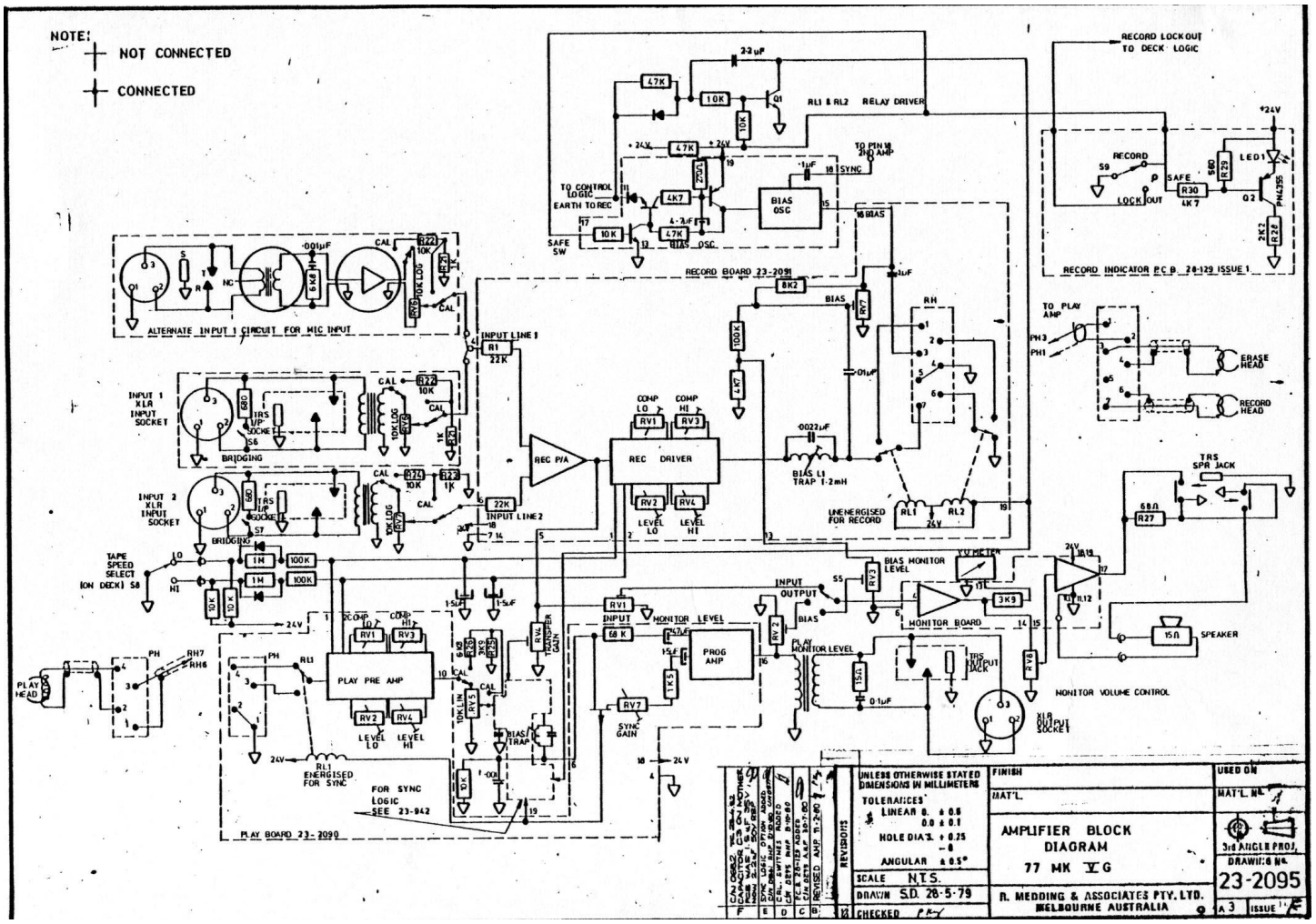
NOTE:
NOT CONNECTED
CONNECTED
RECORD LOCKOUT TO DECK LOGIC
RL1 & RL2 RELAY DRIVER
TO PIN 18 2ND AMP
TO CONTROL LOGIC EARTH TO REC
SAFE SW
BIAS OSC
RECORD BOARD 23-2091
RECORD INDICATOR P.C.B. 28-129 ISSUE 1
ALTERNATE INPUT 1 CIRCUIT FOR MIC INPUT
INPUT 1 XLR INPUT SOCKET
INPUT 2 XLR INPUT SOCKET
TRS 1/4" SOCKET
BRIDGING
INPUT LINE 1
INPUT LINE 2
REC P/A
REC DRIVER
COMP LO
COMP HI
LEVEL LO
LEVEL HI
BIAS L1 TRAP 1·2mH
UNENERGISED FOR RECORD
TO PLAY AMP
ERASE HEAD
RECORD HEAD
TRS SPR JACK
SPEAKER
TAPE SPEED SELECT (ON DECK) S8
PLAY HEAD
PLAY PRE AMP
RL1 ENERGISED FOR SYNC
FOR SYNC LOGIC SEE 23-942
PLAY BOARD 23-2090
MONITOR LEVEL
PROG AMP
SYNC GAIN
BIAS MONITOR LEVEL
VU METER
MONITOR BOARD
PLAY MONITOR LEVEL
TRS INPUT JACK
XLR OUTPUT SOCKET
MONITOR VOLUME CONTROL
UNLESS OTHERWISE STATED DIMENSIONS IN MILLIMETERS
TOLERANCES
LINEAR 0. ± 0.5
0.0 ± 0.1
HOLE DIA. + 0.25 − 0
ANGULAR ± 0.5°
SCALE N.T.S.
DRAWN S.D. 28-5-79
CHECKED
REVISIONS
FINISH
MAT'L
USED ON
MAT'L No.
AMPLIFIER BLOCK DIAGRAM
77 MK IIG
R. MEDDING & ASSOCIATES PTY. LTD.
MELBOURNE AUSTRALIA
3rd ANGLE PROJ.
DRAWING No.
23-2095
A3
ISSUE 1

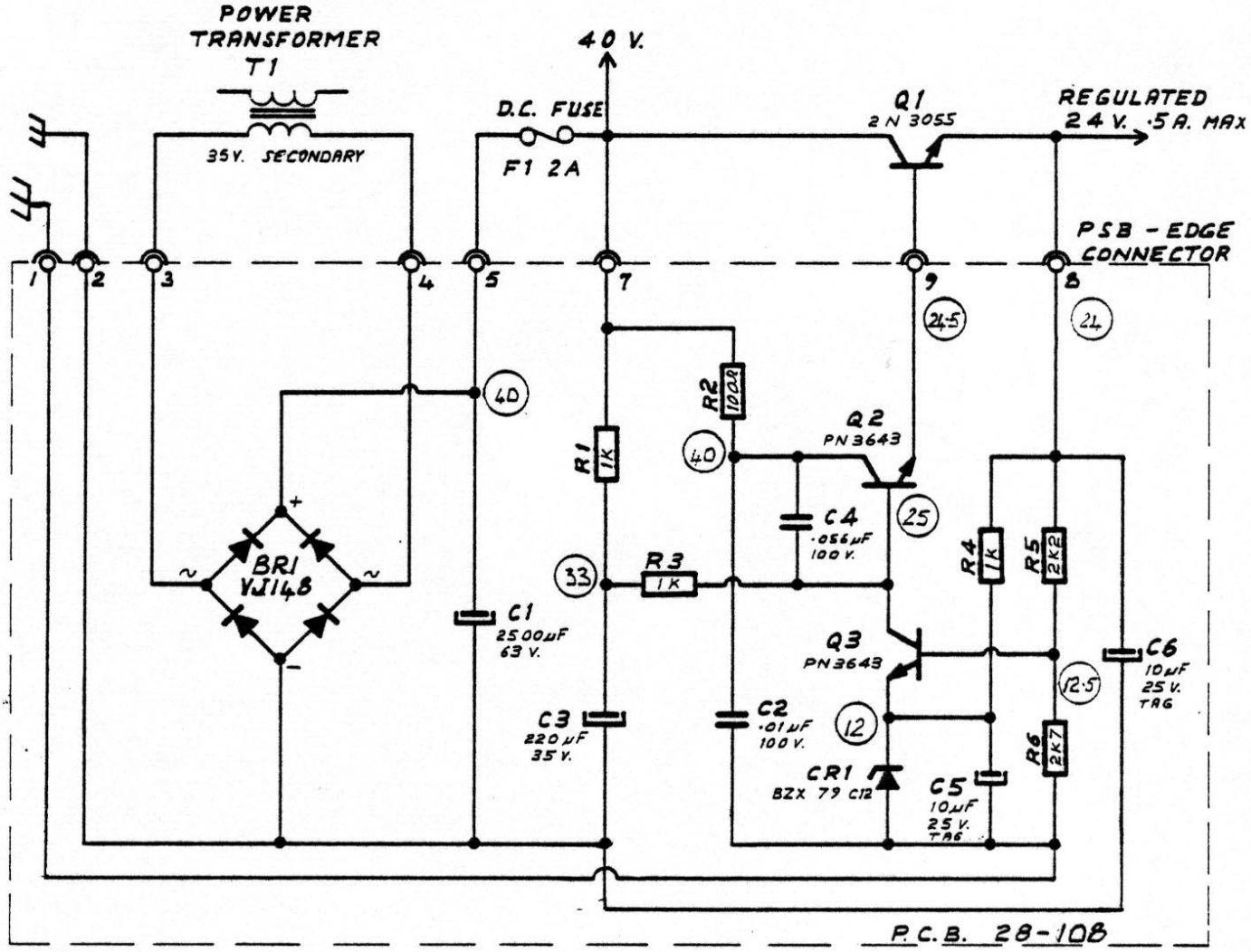

NOTES

1. ALL RESISTORS ¼ W. 5 %

(40) D.C. VOLTAGES

CHANGES	TOLERANCE UNLESS OTHERWISE SPECIFIED FRACTION ± 1/64" DECIMAL ± ·005" ANGLE ± 1/2°	ROUTING.	
		NEXT ASSY.	MAT'L.
		FINISH	
	DESIGNED	R. HEDDING & ASSOCIATES PTY. LTD. 505 [illegible] ST., E. BRUNSWICK ©	DRAWING NUMBER
	DRAWN S DEUTSCHER 17·5·79	POWER SUPPLY P.C.B. CIRCUIT	A 4 23-2096.
	CHECKED PKy		
	SCALE	77 MK I G.	ISSUE- A

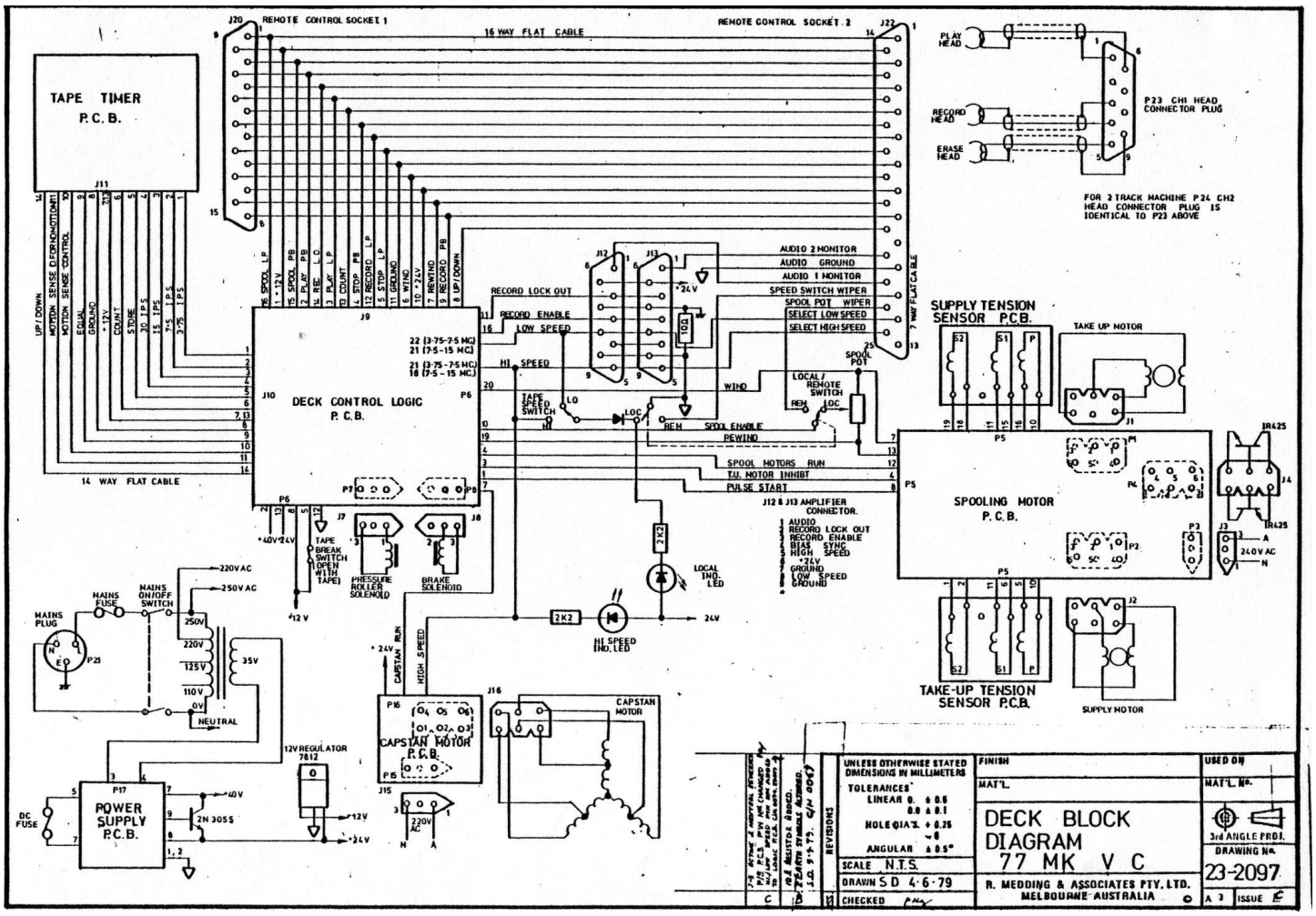
TAPE TIMER P.C.B.
REMOTE CONTROL SOCKET 1
16 WAY FLAT CABLE
REMOTE CONTROL SOCKET 2
PLAY HEAD
RECORD HEAD
ERASE HEAD
P23 CH1 HEAD CONNECTOR PLUG
FOR 2 TRACK MACHINE P24 CH2 HEAD CONNECTOR PLUG IS IDENTICAL TO P23 ABOVE
AUDIO 2 MONITOR
AUDIO GROUND
AUDIO 1 MONITOR
SPEED SWITCH WIPER
SPOOL POT WIPER
SELECT LOW SPEED
SELECT HIGH SPEED
7 WAY FLAT CABLE
RECORD LOCK OUT
RECORD ENABLE
LOW SPEED
HI SPEED
DECK CONTROL LOGIC P.C.B.
14 WAY FLAT CABLE
TAPE SPEED SWITCH
LOCAL / REMOTE SWITCH
SPOOL POT
WIND
REW
SPOOL ENABLE
REWIND
SPOOL MOTORS RUN
T.U. MOTOR INHIBIT
PULSE START
J12 & J13 AMPLIFIER CONNECTOR.
1 AUDIO
2 RECORD LOCK OUT
3 RECORD ENABLE
4 BIAS SYNC
5 HIGH SPEED
6 +24V
7 GROUND
8 LOW SPEED
9 GROUND
SUPPLY TENSION SENSOR P.C.B.
TAKE UP MOTOR
SPOOLING MOTOR P.C.B.
TAKE-UP TENSION SENSOR P.C.B.
SUPPLY MOTOR
TAPE BREAK SWITCH (OPEN WITH TAPE)
PRESSURE ROLLER SOLENOID
BRAKE SOLENOID
LOCAL IND. LED
HI SPEED IND. LED
MAINS PLUG
MAINS FUSE
MAINS ON/OFF SWITCH
220V AC
250V AC
NEUTRAL
CAPSTAN RUN
HIGH SPEED
CAPSTAN MOTOR P.C.B.
CAPSTAN MOTOR
12V REGULATOR 7812
DC FUSE
POWER SUPPLY P.C.B.
2N 3055
UNLESS OTHERWISE STATED DIMENSIONS IN MILLIMETERS
TOLERANCES
LINEAR 0. ± 0.6
0.0 ± 0.1
HOLE DIA'S. + 0.25 − 0
ANGULAR ± 0.5°
SCALE N.T.S.
DRAWN S D 4·6·79
CHECKED
REVISIONS
FINISH
MAT'L.
USED ON
MAT'L. No.
DECK BLOCK DIAGRAM 77 MK V C
R. MEDDING & ASSOCIATES PTY. LTD. MELBOURNE AUSTRALIA
3rd ANGLE PROJ.
DRAWING No. 23-2097
A 3
ISSUE E

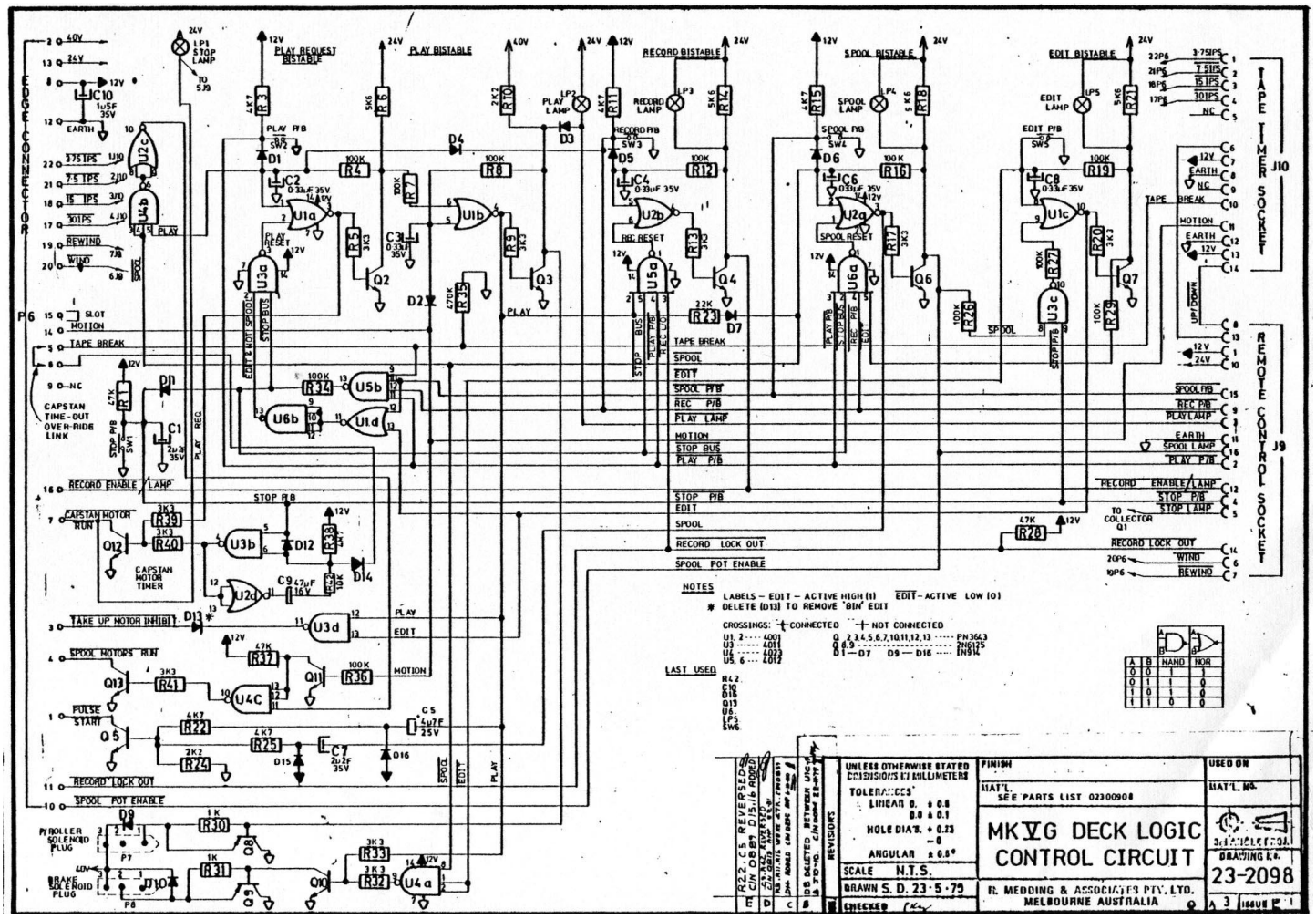
MK VG DECK LOGIC CONTROL CIRCUIT
R.J. MEDDING & ASSOCIATES PTY. LTD.
MELBOURNE AUSTRALIA
DRAWING No. 23-2098
SCALE N.T.S.
DRAWN S.D. 23·5·79
CHECKED
FINISH
SEE PARTS LIST 02300908
MAT'L. No.
USED ON
UNLESS OTHERWISE STATED DIMENSIONS IN MILLIMETERS
TOLERANCES
LINEAR 0. ± 0.8
0.0 ± 0.1
HOLE DIA'M. + 0.23 − 0
ANGULAR ± 0.8°
REVISIONS
ISSUE E 1
TAPE TIMER SOCKET J10
REMOTE CONTROL SOCKET J9
PLAY REQUEST BISTABLE
PLAY BISTABLE
RECORD BISTABLE
SPOOL BISTABLE
EDIT BISTABLE
PLAY LAMP
RECORD LAMP
SPOOL LAMP
EDIT LAMP
STOP LAMP
CAPSTAN MOTOR RUN
CAPSTAN MOTOR TIMER
CAPSTAN TIME-OUT OVER-RIDE LINK
TAKE UP MOTOR INHIBIT
SPOOL MOTORS RUN
PULSE START
RECORD LOCK OUT
SPOOL POT ENABLE
ROLLER SOLENOID PLUG
BRAKE SOLENOID PLUG
RECORD ENABLE LAMP
TO COLLECTOR Q1
NOTES
LABELS – EDIT – ACTIVE HIGH (1) EDIT – ACTIVE LOW (0)
* DELETE (D13) TO REMOVE 'BIN' EDIT
CROSSINGS: ┼ CONNECTED ┼ NOT CONNECTED
U1, 2 ····· 4001
U3 ····· 4011
U4 ····· 4023
U5, 6 ··· 4012
Q 2,3,4,5,6,7,10,11,12,13 ····· PN3643
Q 8,9 ····· 2N6125
D1 — D7 D9 — D16 ····· IN914
LAST USED
R42
C10
D16
Q13
U6
LP5
SW6
NAND
NOR

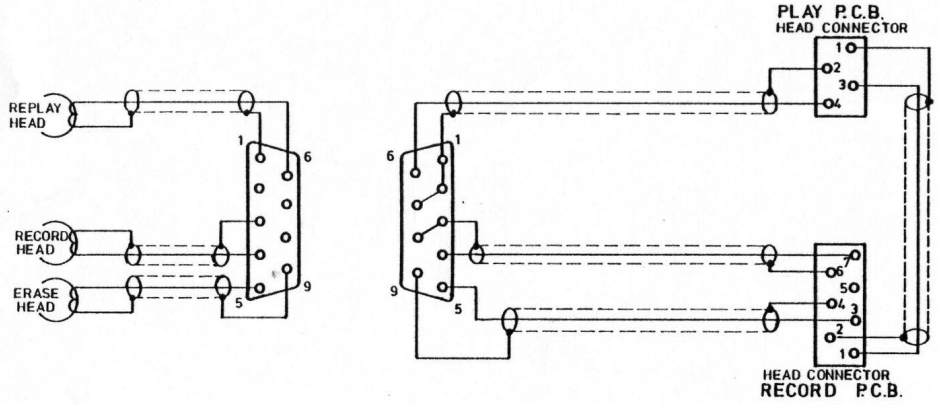

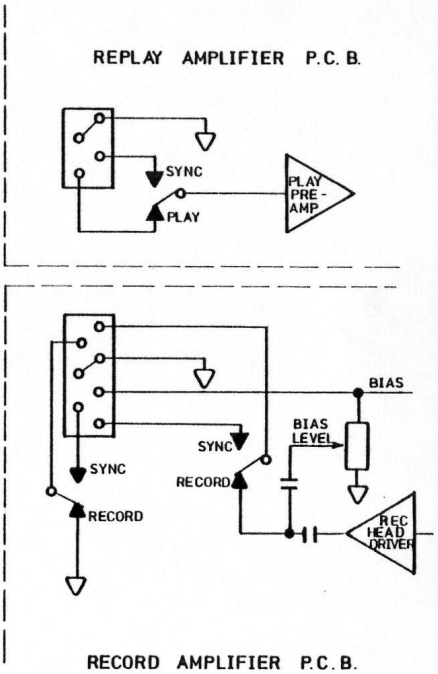

REVISIONS	UNLESS OTHERWISE STATED DIMENSIONS IN MILLIMETERS TOLERANCES LINEAR 0. ± 0.5 0.0 ± 0.1 HOLE DIA'S. + 0.25 − 0 ANGULAR ± 0.5°	FINISH	USED ON
		MAT'L.	MAT'L. No.
	SCALE N.T.S.	HEAD CONNECTION CIRCUIT 77 MK V G	3rd ANGLE PROJ.
	DRAWN S.D. 31-7-79	B. MEODING & ASSOCIATES PTY. LTD. MELBOURNE AUSTRALIA ©	DRAWING No. 26-309
ISS.	CHECKED PKy		A 4 ISSUE A

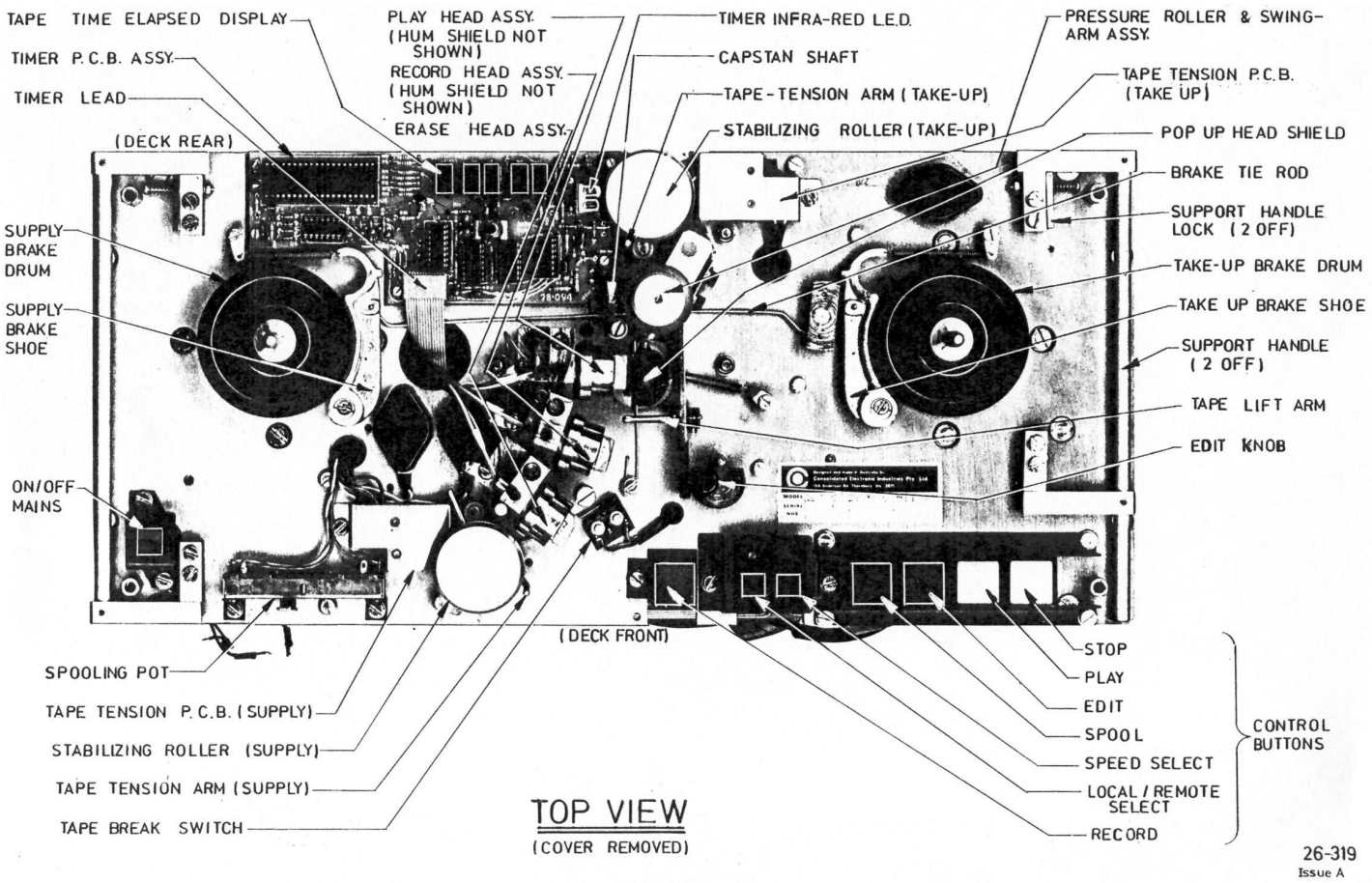

TOP VIEW
(COVER REMOVED)

26-319
Issue A

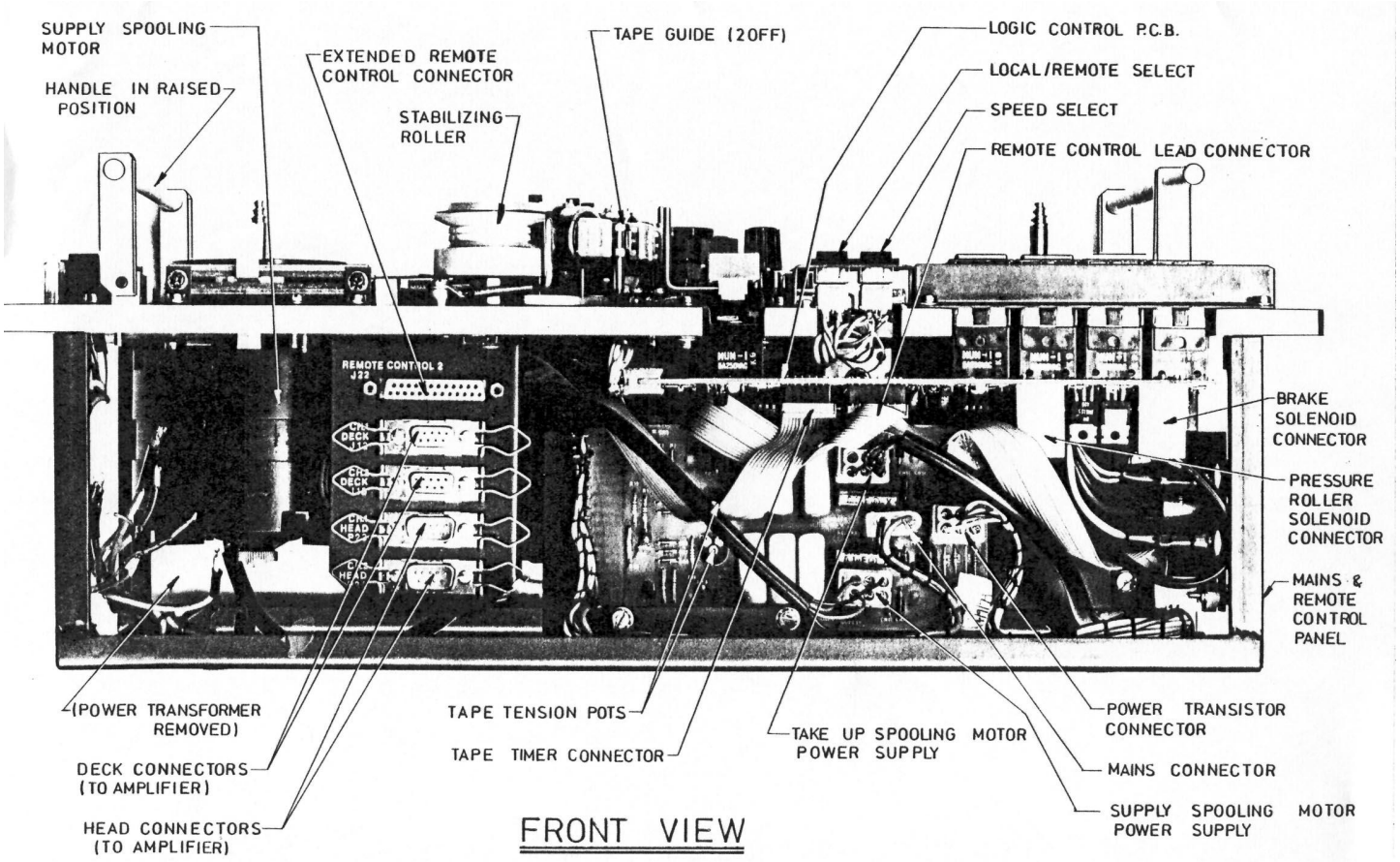

FRONT VIEW

26-320
Issue A

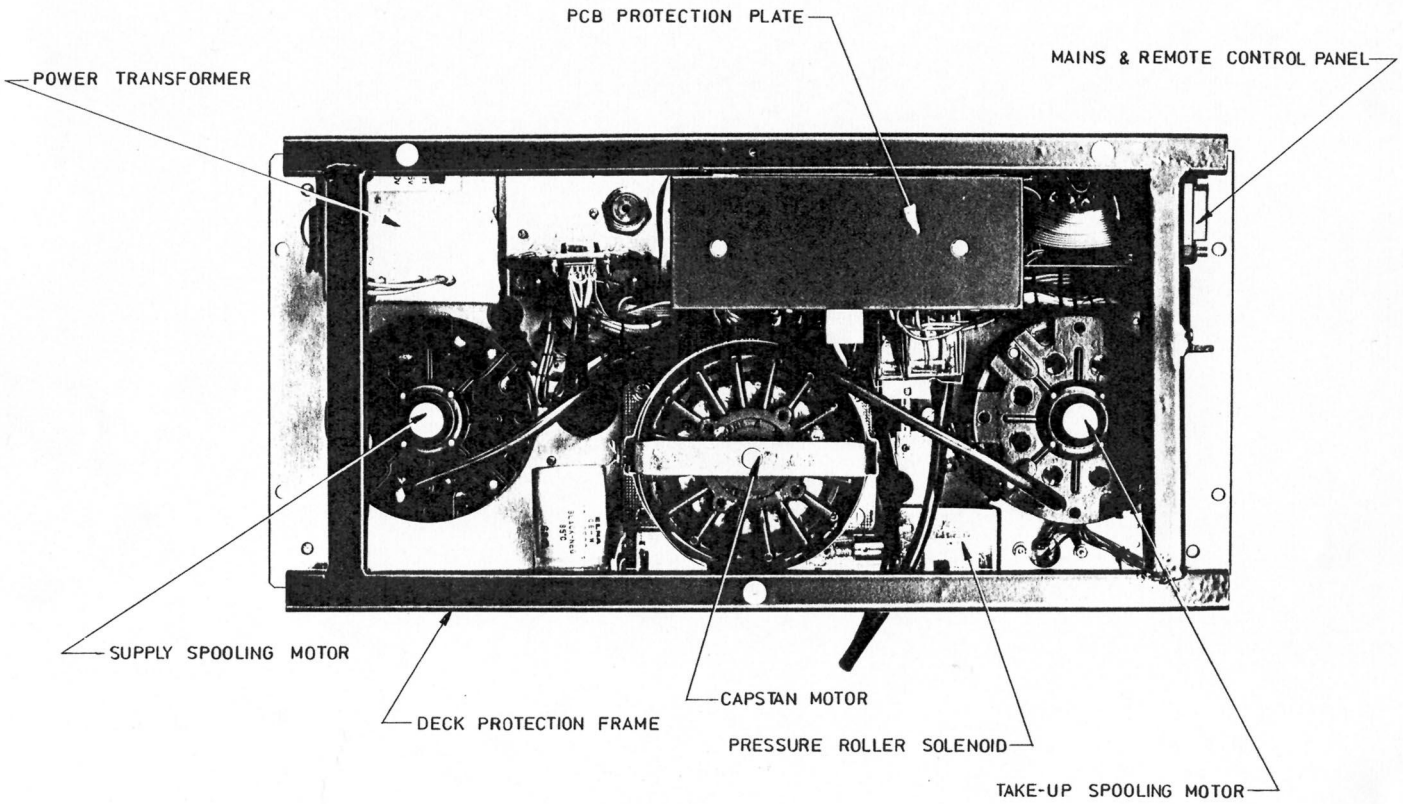

DECK
BOTTOM VIEW

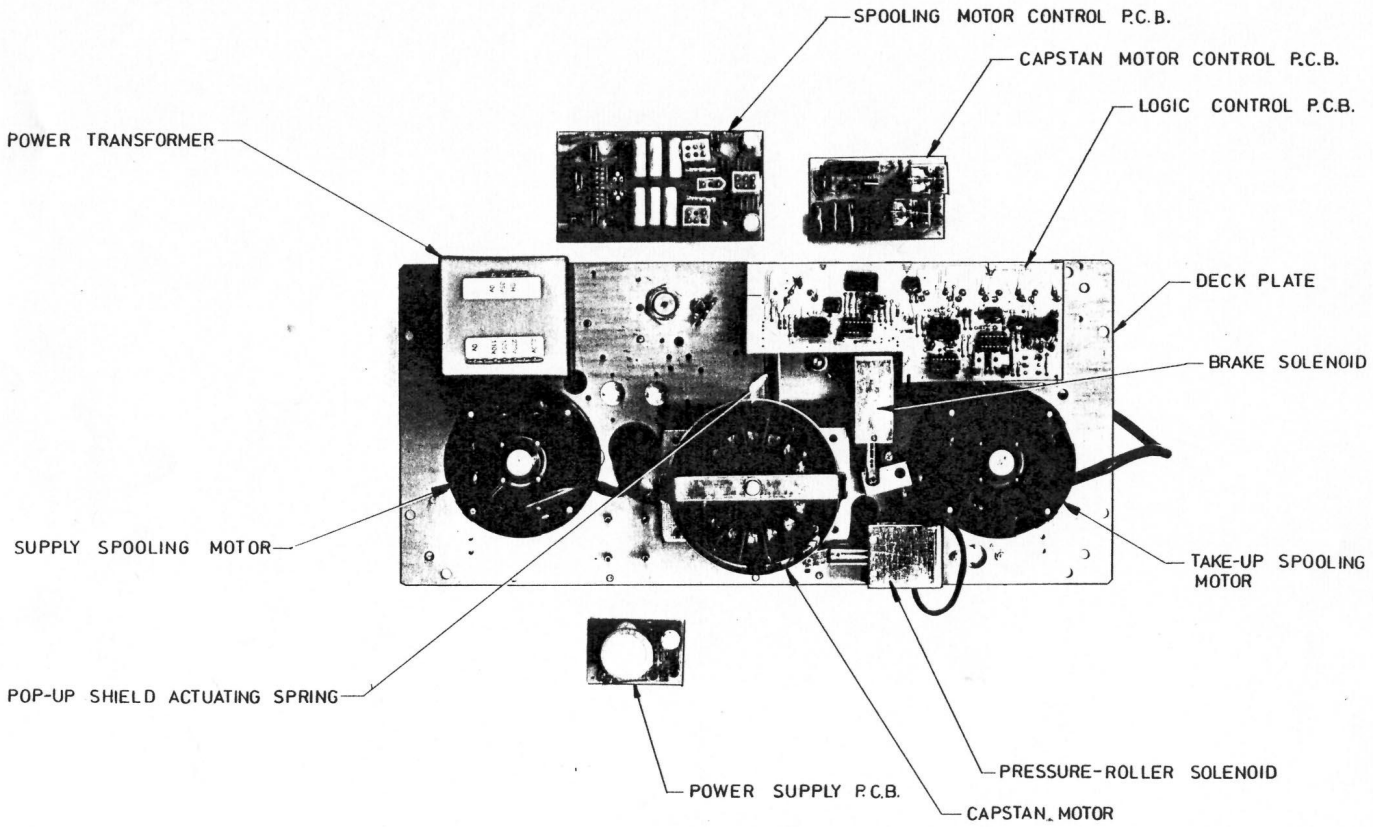

BOTTOM VIEW (DECK PROTECTION FRAME REMOVED)

(BASIC DECK)

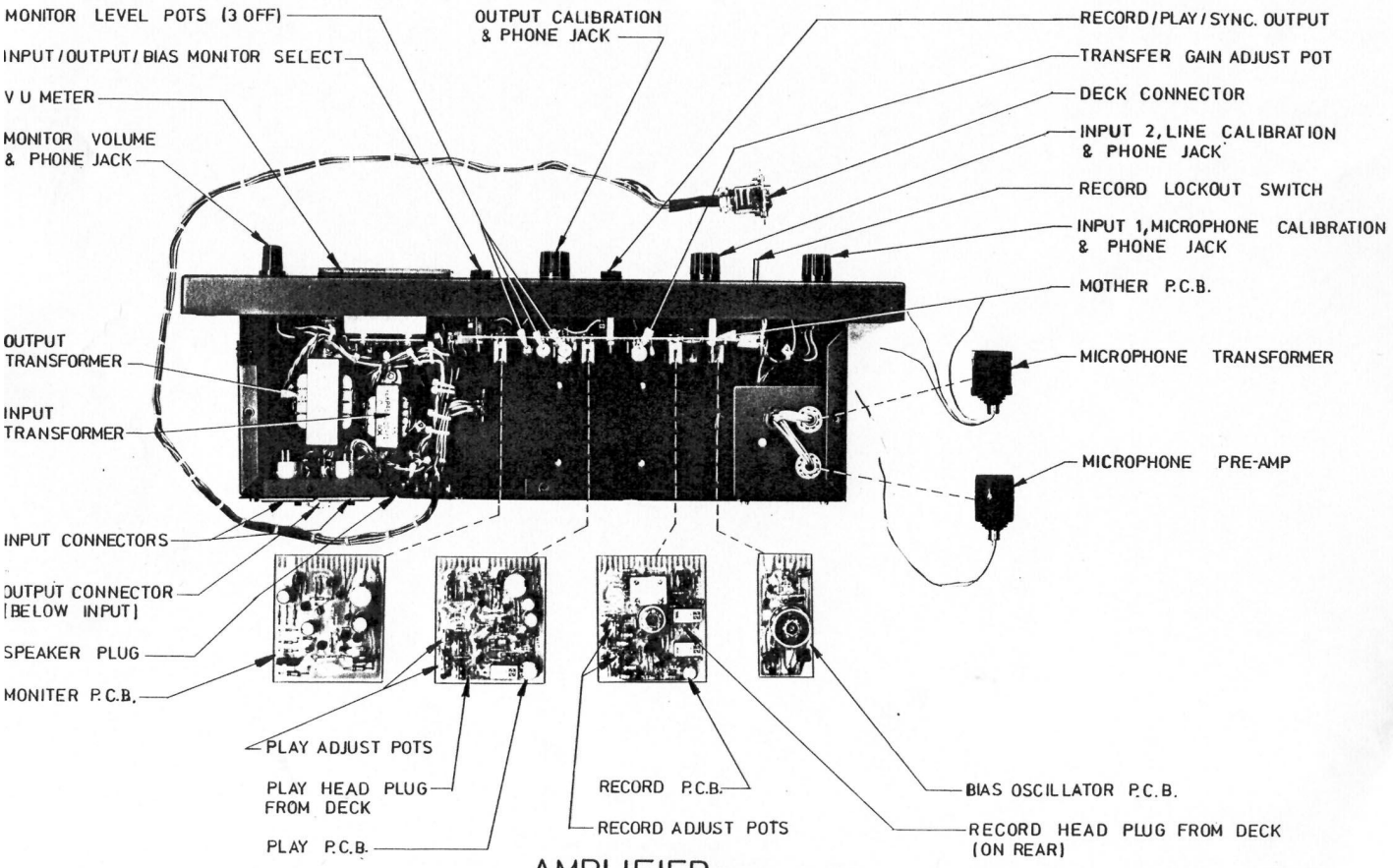

AMPLIFIER (TOP VIEW)

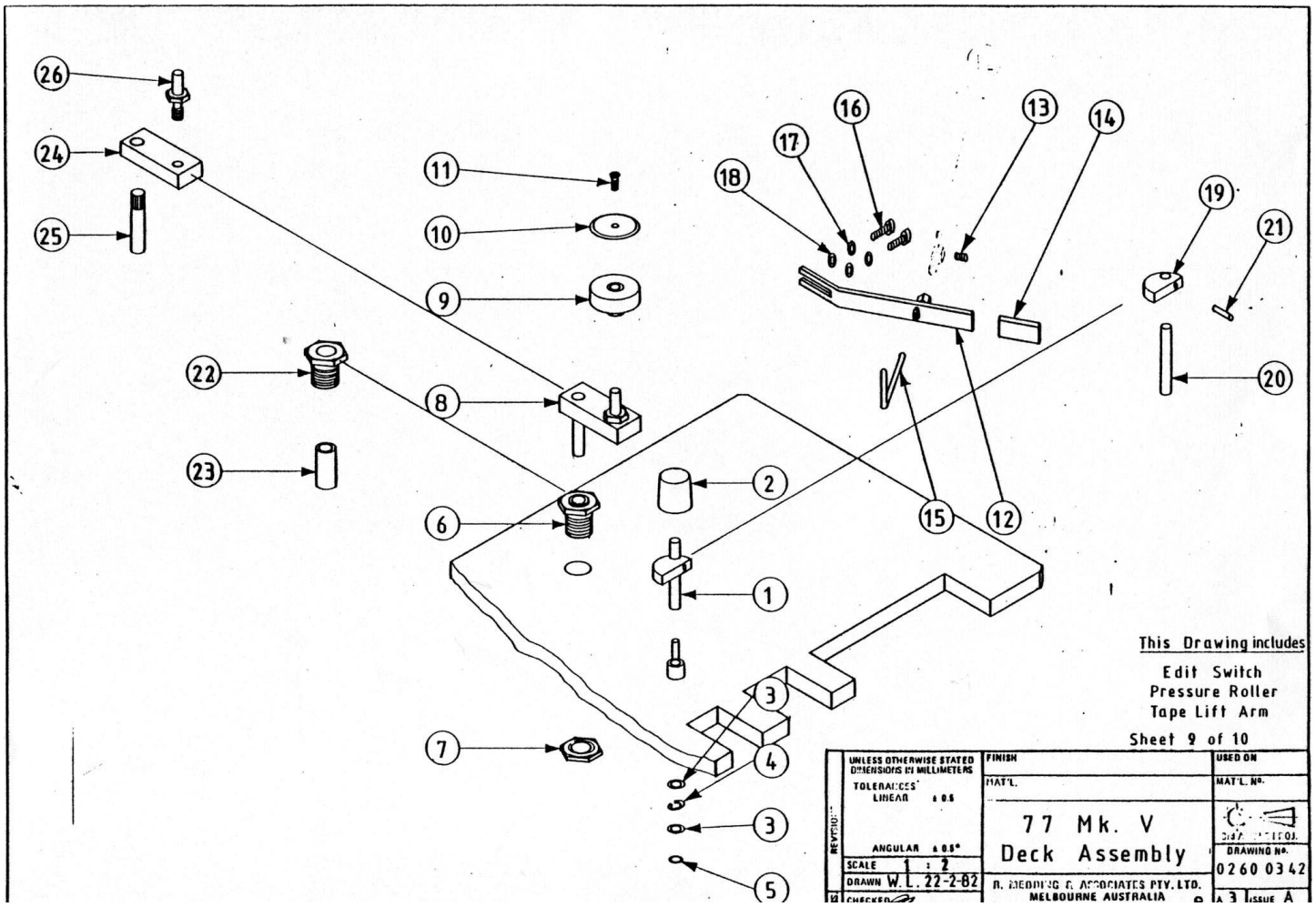

This Drawing includes

Edit Switch
Pressure Roller
Tape Lift Arm

Sheet 9 of 10

UNLESS OTHERWISE STATED DIMENSIONS IN MILLIMETERS TOLERANCES LINEAR ± 0.5 ANGULAR ± 0.5°	FINISH	USED ON
	MAT'L.	MAT'L. No.
	77 Mk. V Deck Assembly	DRAWING No. 0260 0342
SCALE 1 : 2		
DRAWN W.L. 22-2-82	R. BEDDING & ASSOCIATES PTY. LTD. MELBOURNE AUSTRALIA	A3 ISSUE A
CHECKED		

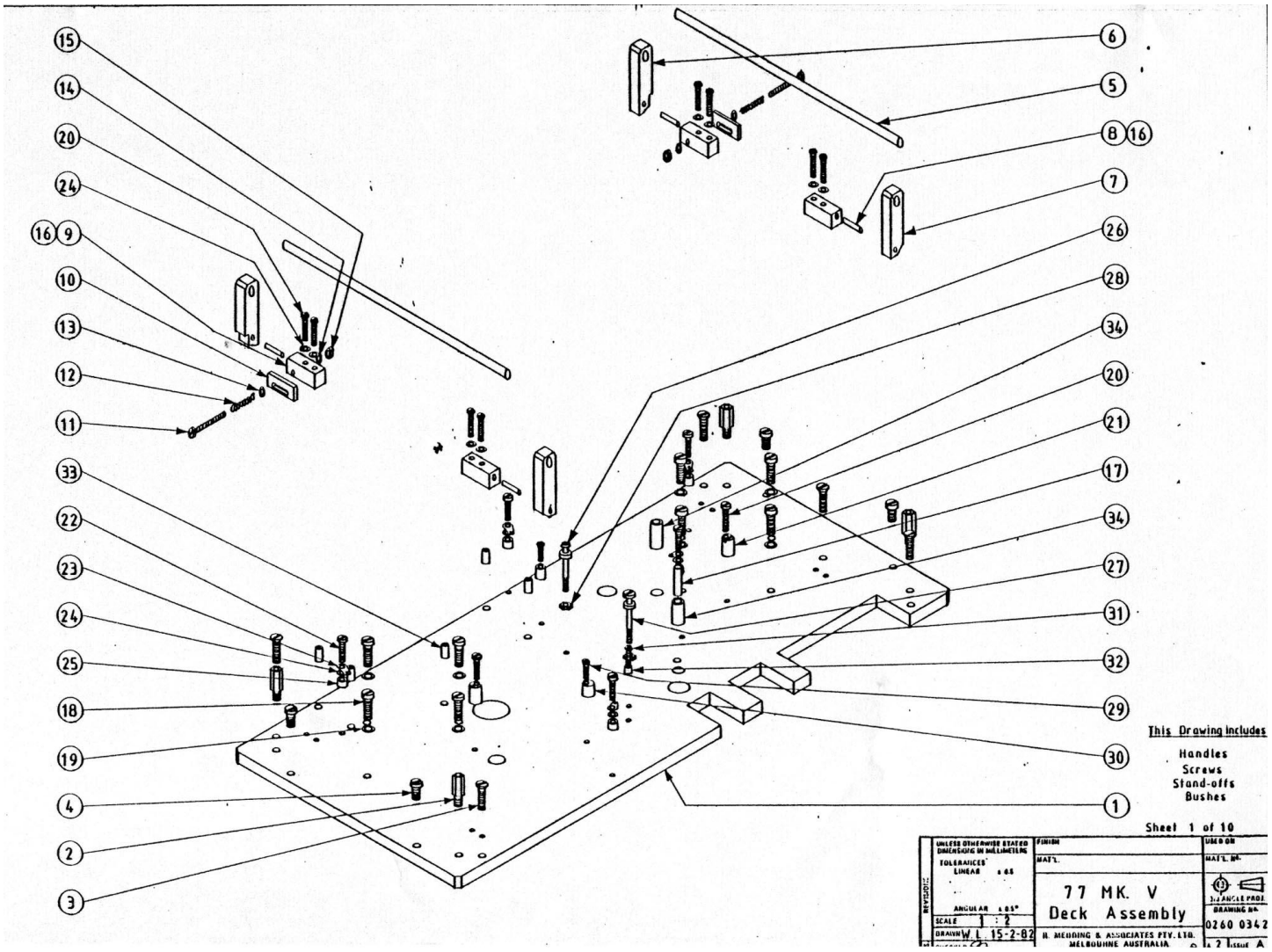

This Drawing Includes

Handles
Screws
Stand-offs
Bushes

Sheet 1 of 10

UNLESS OTHERWISE STATED DIMENSIONS IN MILLIMETRE TOLERANCES LINEAR ±.05 ANGULAR ±.05°	FINISH	USED ON
	MAT'L.	MAT'L. No.
	77 MK. V Deck Assembly	3rd ANGLE PROJ.
SCALE 1 : 2		DRAWING No. 0260 0342
DRAWN W. L. 15-2-82	R. MEDDING & ASSOCIATES PTY. LTD. MELBOURNE AUSTRALIA	SHEET 2 ISSUE A

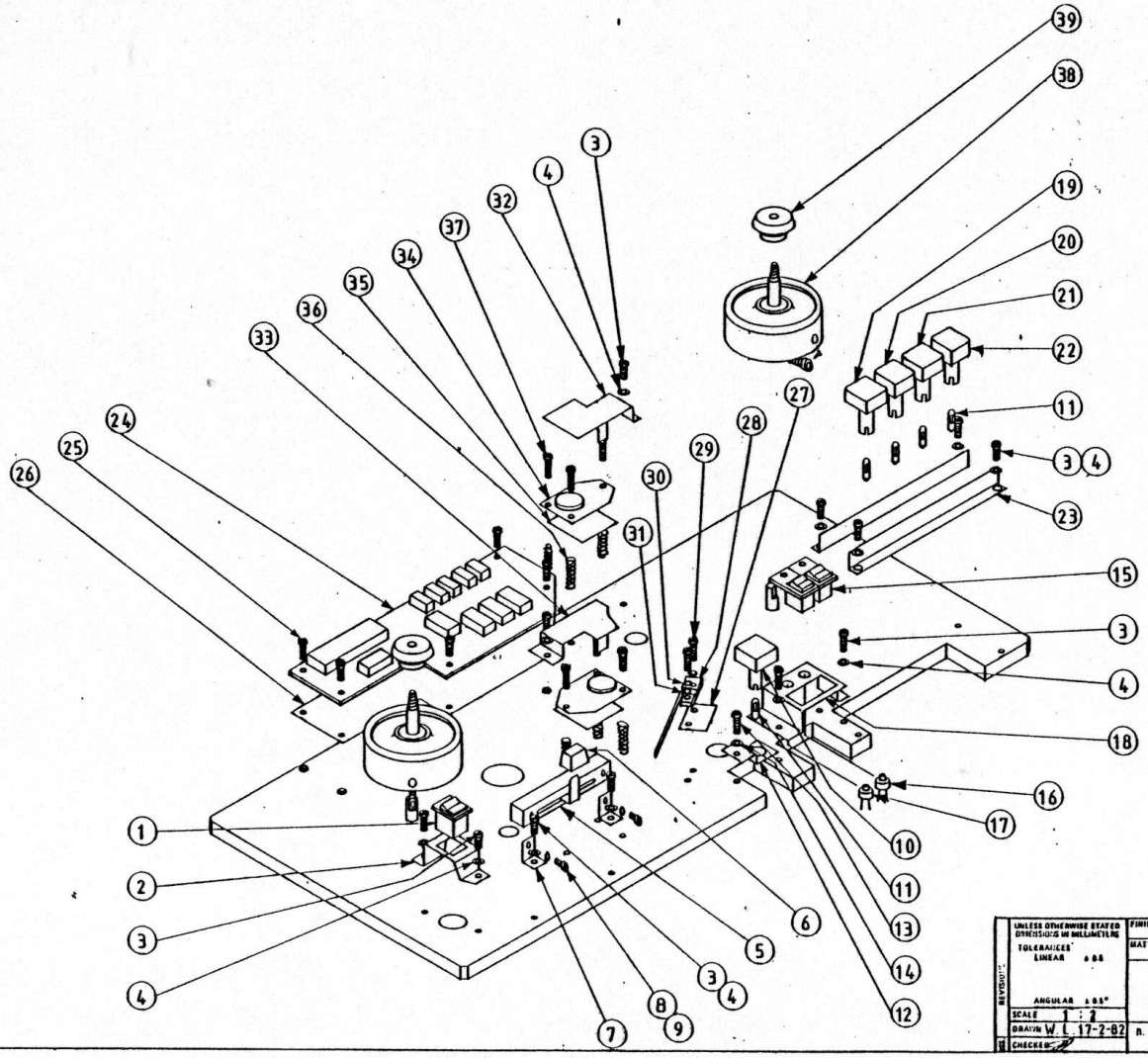

This Drawing Includes

Switches
Brake Drums
Tape Timer Display
Tape Tension P.C.B's
Tape Break Microswitch

Sheet 3 of 10

UNLESS OTHERWISE STATED DIMENSIONS IN MILLIMETERS TOLERANCES LINEAR ±0.05 ANGULAR ±0.05°	FINISH	USED ON
	MAT'L.	MAT'L. No.
SCALE 1 : 2	77 Mk. V Deck Assembly	3rd ANGLE PROJ.
DRAWN W. L. 17-2-82	R. MEDDING & ASSOCIATES PTY. LTD. MELBOURNE AUSTRALIA	DRAWING No. 0260 0342
CHECKED		A 2 ISSUE A

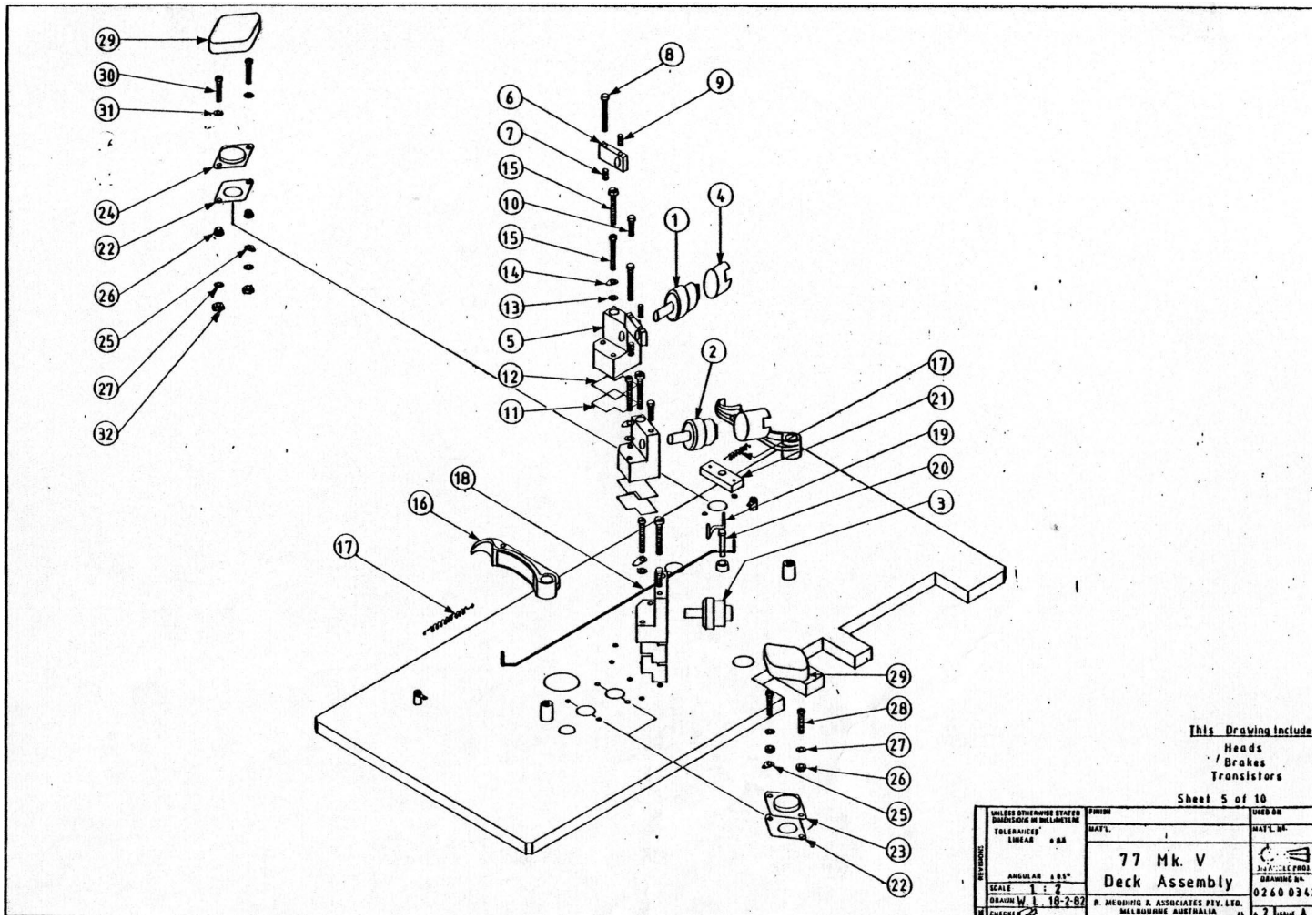

This Drawing Include
Heads
/ Brakes
Transistors

Sheet 5 of 10

UNLESS OTHERWISE STATED DIMENSIONS IN MILLIMETRE TOLERANCES LINEAR ±.05 ANGULAR ±0.5°	FINISH	USED ON
	MAT'L.	MAT'L. NO.
SCALE 1 : 2	77 Mk. V Deck Assembly	DRAWING No. 0260 034
DRAWN W. L. 10-2-82	R. MEDDING & ASSOCIATES PTY. LTD. MELBOURNE AUSTRALIA	No. 2 Issue A

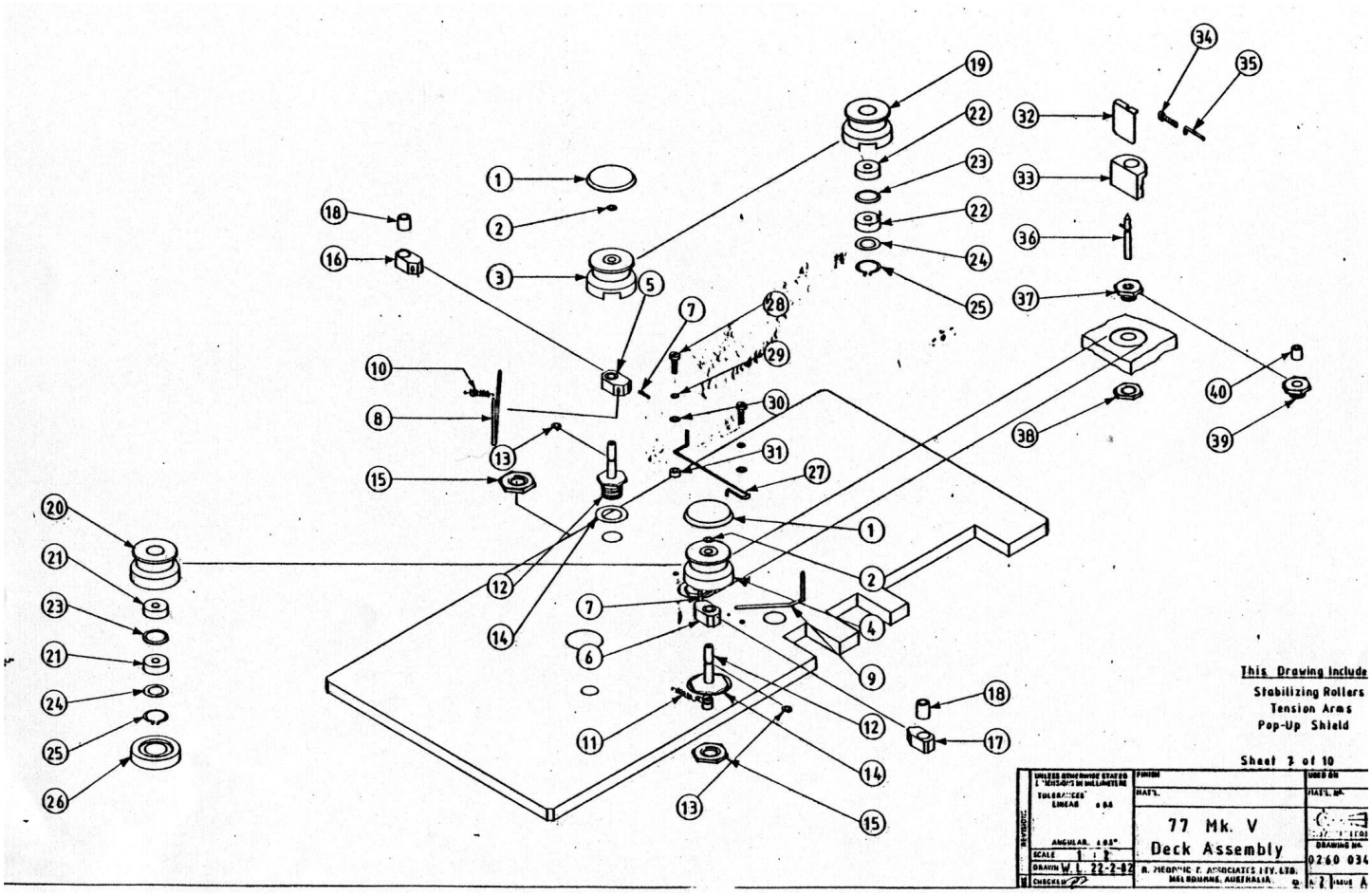
This Drawing Include
Stabilizing Rollers
Tension Arms
Pop-Up Shield
Sheet 3 of 10
77 Mk. V
Deck Assembly
SCALE 1 : 1
DRAWN W.L. 22-2-82
CHECKED
R. PIEDRICK & ASSOCIATES PTY. LTD.
MELBOURNE, AUSTRALIA.
DRAWING No.
0260 034
REVISIONS

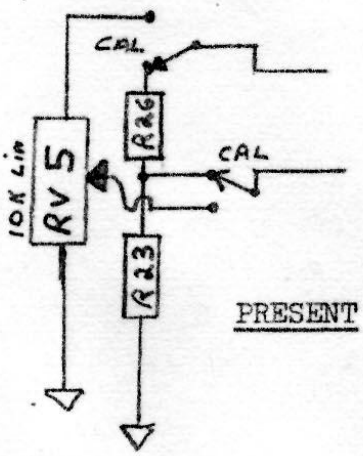

PRESENT

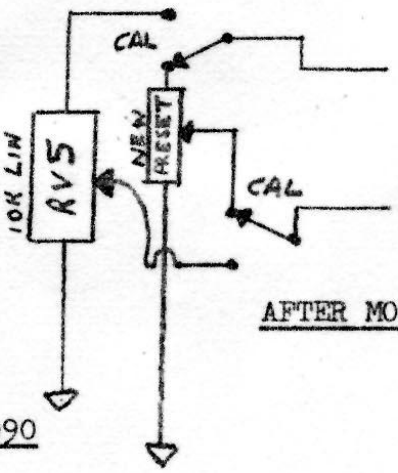

AFTER MOD.

ON DRAWING N°.23-2090

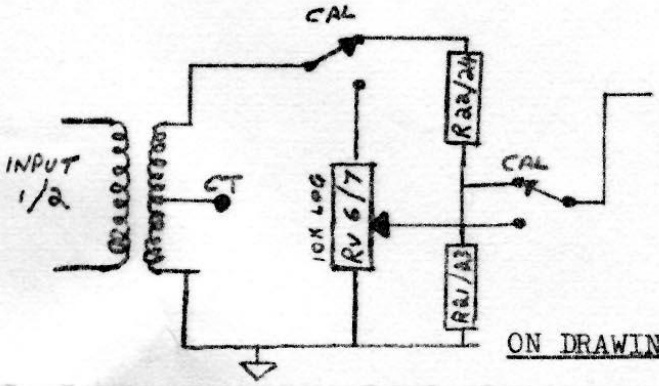

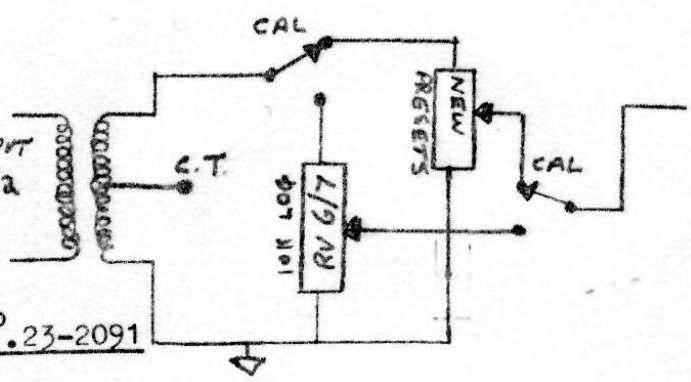

ON DRAWING N°.23-2091